GA-GENIV-052

Generation IV Nuclear Energy Initiative

Gas-Cooled Fast Reactor Guard Containment Design
2006 Final Report

By
M. Venkatesh
A. Baxter

Date Published: September, 2006

General Atomics

Work prepared under
Department of Energy
Contract No. DE-FC07-06ID14723

Table of Contents

1. Objectives and Summary 1

2. Previous Guard Containment Design Studies 3

3. New Guard Containment Design Studies 7
3.1 Guard Containment Layout and Support Structures Design for the 2400MWt Plant 7
3.2 2400MWt Guard Containment Top Head Layout and Penetration Design 23
3.3 2400MWt Guard Containment Side Penetration Study 31
3.4 Evaluation of Guard Containment Design Under Off-Normal Conditions 31
3.5 2400MWt Guard Containment Seismic Considerations 34
3.6 2400MWt Guard Containment Economic Evaluation 35

4. Conclusions 36

5. Acronyms 37

6. References 37

Table of Figures

Fig. 2-1: 2400MWt Direct Cycle Guard Containment Elevation View 3
Fig. 2-2: 2400MWt Plant Layout, Direct Cycle GC Option 4
Fig. 2-3: 2400MWt GFR Core and Reactor Vessel Layout 4
Fig. 2-4: 2400MWt Direct Cycle Reactor Vessel Axial Cross Section 5
Fig. 2-5: 2400MWt Indirect Cycle Guard Containment Envelope - Elevation View. 6
Fig. 2-6: 2400MWt indirect cycle Guard Containment envelope - layout view 6
Fig. 3.1.1: 2400 MWt GFR Reactor Building Elevation View 9
Fig. 3.1.2: 2400MWt GFR Guard Containment Layout – Plan View 10
Fig. 3.1.3: Section through Reactor Core 11
Fig. 3.1.4: Reactor Vessel and SCS Unit Elevation View 14
Fig. 3.1.5: Support Systems for the Reactor Vessel, the PCU Vessels, and the SCS Units 15
Fig. 3.1.6: Details of the Reactor Vessel (RV) Support System 16
Fig. 3.1.7: Details of the Reactor Vessel Support Framing 17
Fig. 3.1.8: SCS Unit Support Framing Details 18
Fig. 3.1.9: PCU Vessel Support System Details 20
Fig. 3.1.10: Snubber Lateral Support Detail 21
Fig. 3.1.11: Vertical Support Detail 22
Fig. 3.2.1: Guard Containment Layouts and Dimensions for Above Ground and Partial Embedment 24
Fig. 3.2.2: Guard Containment Top Head Layout 25
Fig. 3.2.3: RV Top Head Penetration Plug 26
Fig. 3.2.4: PCU Inner and Outer Top Head Penetration Plugs 27
Fig. 3.2.5: SCS/ECS Top Head Penetration Plugs 28
Fig. 3.2.6: RV and Outer PCU Top Head Penetration Plugs Detail - A 29
Fig. 3.2.7: SCS/ECS and Inner PCU Top Head Penetration Plugs Detail - B 30
Fig. 3.3.1: Large Side Wall Penetration Study 32
Fig. 3.3.2: Individual PCU and SCS Side Wall Penetration Example 33
Fig. 3.5.1: GC Partial Embedment Seismic Study 34

List of Tables

Table 3.1.1: Dimensions and Weights for the PCU Vessels, the RV, and SCS Pods..... 8
Table 3.6.1: Material Cost Estimates for the GC Concrete and Internal Steel 35

1. Objectives and Summary

The work reported here is a continuation of the General Atomics (GA) program in support of the development of Advanced Gas-Cooled Reactors with Hardened/Fast Neutron Spectrum (GFRs) with a high degree of safety and a proliferation resistant fuel cycle.

The original 3-year project started in March 2002, and concentrated on the development of design options for a 600MWt GFR that could meet Gen-IV goals, including passive safety, sustainability and non-proliferation, and good economics (Ref 1). GA's work in this program included an evaluation of various BOP plant layout options and a review of the GT-MHR modular approach for applicability to the GFR program. GA also performed primary system studies including a review of the original Gas-Cooled Fast Reactor (GCFR) safety, licensing, and accident issues; developed a series of vessel designs; performed an initial shielding study; and evaluated core cool down capabilities under loss of flow and loss of pressure conditions (Ref 1).

With the completion of the exploratory studies on the 600MWt plant, the project began a series of trade studies focused on a number of design challenges identified by the exploratory assessments. The focus of the trade studies was on unit size and a scale-up to a larger plant size (2400 MWt) to take advantage, not only of economics of-scale, but also to benefit from the decreased neutron leakage, which allows reaching an internal conversion ratio of 1 with less challenging fuels while still working at a significant power density (100 MW/m^3). Passive safety considerations led to the selection of a double Guard Containment/vessel (guard/proximate) approach which allows the potential for scale-up of the plant-size without drastically changing the safety approach. To minimize power conversion development problems with this higher power level core, the 600MWt module PCU design was retained so that 4 of these units were included in the plant layout.

General Atomics objectives in the present phase of the GFR project, which started in February 2006, were to develop a conceptual Concrete Guard Containment (GC) design to accommodate the major components of the 2400MWt GFR including the Reactor Vessel (RV), Power Conversion Unit (PCU), Shutdown and Emergency Cooling Systems (SCS/ECS), and the cross vessels connecting the components; to evaluate the design for both pressurized and normal atmospheric cases; to determine whether prestressed or reinforced concrete is required for the GC; to evaluate site-specific seismic designs for partially embedded or above ground supporting structure for these components; to develop a conceptual layout for the GC and vessels; to evaluate the GC penetration requirements and the layout needed for core refueling; and to prepare a preliminary cost estimate.

The previous GC design studies are briefly reviewed and summarized in Section 2. This initial design was a compartmentalized layout, and a review of plant operating conditions, especially temperatures and pressures, led to the recommendation of an open GC layout with the various internal structures (RV, PCU, SCS, etc.) supported by metallic frames. Based on this result an open GC design was developed, which encloses the PCU vessels and the SCS/ECS units as well as the RV. In addition steel support structures were designed for all the vessels inside the GC. Dimensions and ASME Section III Div 1 code

permitted material selections were chosen to support the vessels and units in the GC, to allow for temperature induced changes, to ensure adequate seismic response of the vessels and components, and to minimize GC concrete temperatures during normal operation and under accident conditions. Core refueling penetrations and layout and equipment were also developed (Ref 2). Basic dimensions and weights of the GC and internal components were developed along with basic conceptual layouts, and seismic constraints. These results are discussed in section 3.1.

This layout was further evaluated for accident conditions and for site specific applications including fully above ground and partial embedment layouts (see the discussion in sections 3.2 through 3.5). This evaluation shows that a 2m thick reinforced concrete Guard Containment wall with prestressing is required to withstand accident (i.e., 8-bar gas pressure) conditions. The top head could be 2m thick if the unit is partially embedded, but may have to be up to 3m thick if placed above ground in a high seismic location. It contains 1m x 2m embedded concrete beams consistent with the layout of the steel framing and support structures internal to the GC, which support the PCU, RV and SCS/ECS units. This GC design can withstand average accident temperatures up to 250°F and 600°F peak at the wall. If the GC is partially embedded to a depth of 15m, then the analysis shows that the GC concrete wall could be reduced to 1.7m thickness. Partial embedment also provides a significant improvement in the seismic resistance of the GC. For both the above ground and partially embedded layouts, a 5m thick foundation mat 41m in diameter is assumed. The GC diameter is 37m.

The large top head penetrations were evaluated as to number and dimensions, and the concrete plug arrangements, including plug anchors, were developed. Also the piping requirements and the number of penetrations needed through the side wall of GC were evaluated. One reactor vessel penetration, four PCU penetrations and four SCS penetrations (total 9 penetrations) are needed in the top head for access and replacement of the major vessel components. A plug within a plug arrangement was designed for the top head penetration above the PCUs and offered as an option. This dual plug layout allows work on the generator portion of the PCU without excess exposure to the rest of the assembly. An embedded concrete beam framework will be designed in the 2m thick top head and will be supported by the steel framing underneath. This will resist the 8 bar accident pressure. Initially it was assumed that the piping from the PCU and SCS cooling systems would be collected into single large piping penetration per vessel in the side wall. However, a review of leakage problems (see section 3.3) with this arrangement led to the decision to provide for individual side wall penetrations for each of the pipes exiting, 4 for the PCU and 2 for the SCS coolant pipes. These pipes would pass through sleeves at the concrete side walls. Based on MHR design analysis, this arrangement results in less total leakage than the fewer, but larger, headers.

A brief evaluation was made of the material costs of the Guard Containment and the internal steel support framing based on the volumes and weights required. The results are discussed in section 3.6.

Conclusions are presented in Section 4, a list of acronyms is given in sections 5, and references are given in section 6.

2. Previous Guard Containment Design Studies

In the initial 2400MWt GFR design studies, a GC option with a 5 bar containment pressure in a pre-stressed concrete containment was selected. The volume and cost analysis described in Ref 1 showed that, at these lower pressures, the GC option has a lower cost than the corresponding pre-stressed concrete reactor vessel (PCRV), which is similar to that used for the FSV reactor, and was planned for the GCFR design. For the direct cycle GFR design, this GC option is shown in elevation view in figure 2-1. The pre-stressed concrete containment is 36m in diameter and 44m high (other dimensions are also indicated on the figure). The PCU vessel (one of 4) is located outside the Guard Containment, and the GC penetrations for connecting to the PCU and SCS ducts must be separated 4.5m vertically and 1m horizontally to meet ASME code requirements. A smaller spacing leads to a thicker GC wall and to fabrication problems.

The layout of the 2400MWt direct cycle GC option is given in figure 2-2, which shows the location of the four PCU vessels and four SCS units. The overall plant dimensions are driven by the reactor vessel (RV) and PCU requirements. In turn, the RV radial dimensions are based upon the core diameter and the reflector and shielding thicknesses needed. The RV height is based on the SCS height and ducting, the IHX height and location, the core height, the PCU cross vessel location, and refueling reach concerns. The resulting 2400MWt reactor vessel is shown in cross section, with basic dimensions, in figure 2-3, and in axial cross section in figure 2-4.

Fig. 2-1: 2400MWt Direct Cycle Guard Containment Elevation View

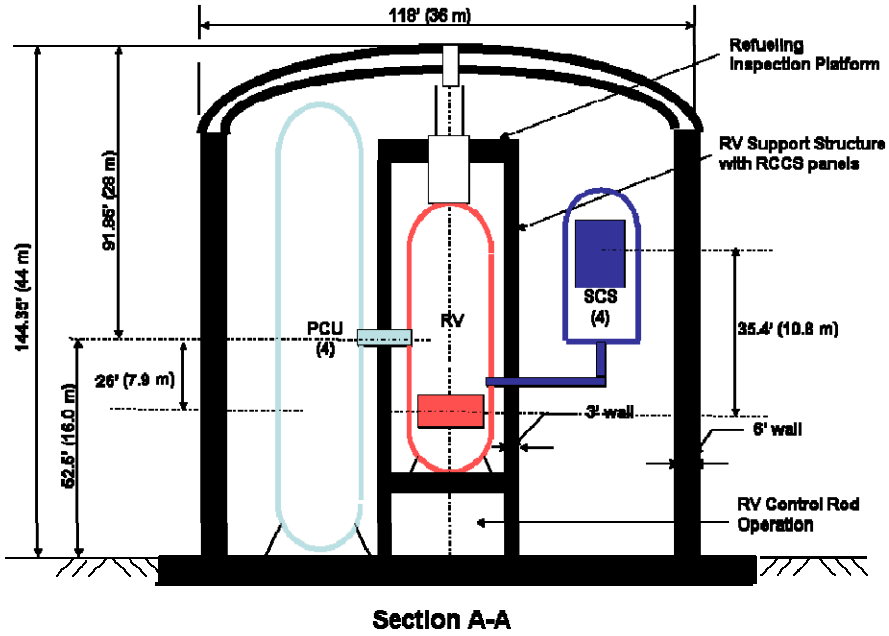

Fig. 2-2: 2400MWt Plant Layout, Direct Cycle GC Option

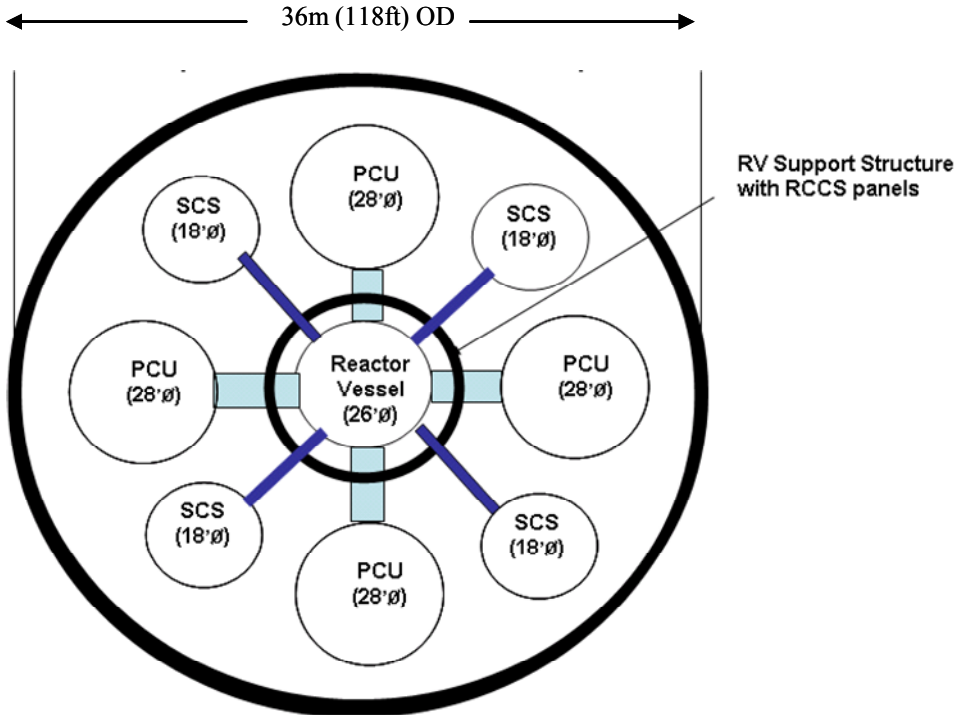

Fig. 2-3: 2400MWt GFR Core and Reactor Vessel Layout

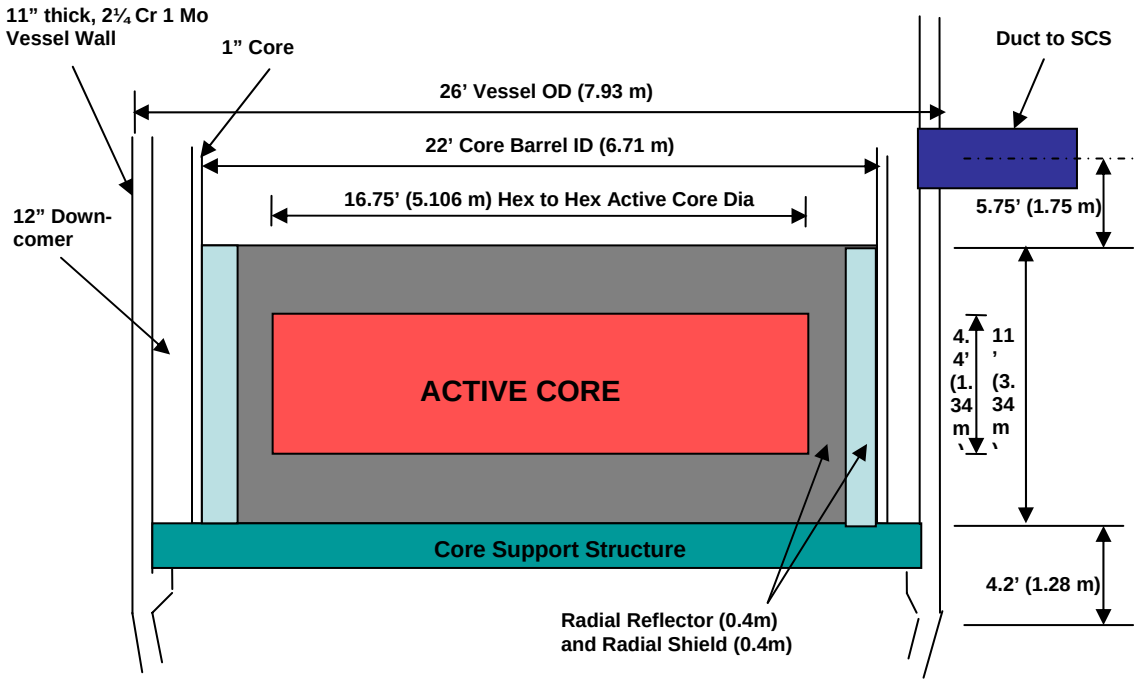

Fig. 2-4: 2400MWt Direct Cycle Reactor Vessel Axial Cross Section

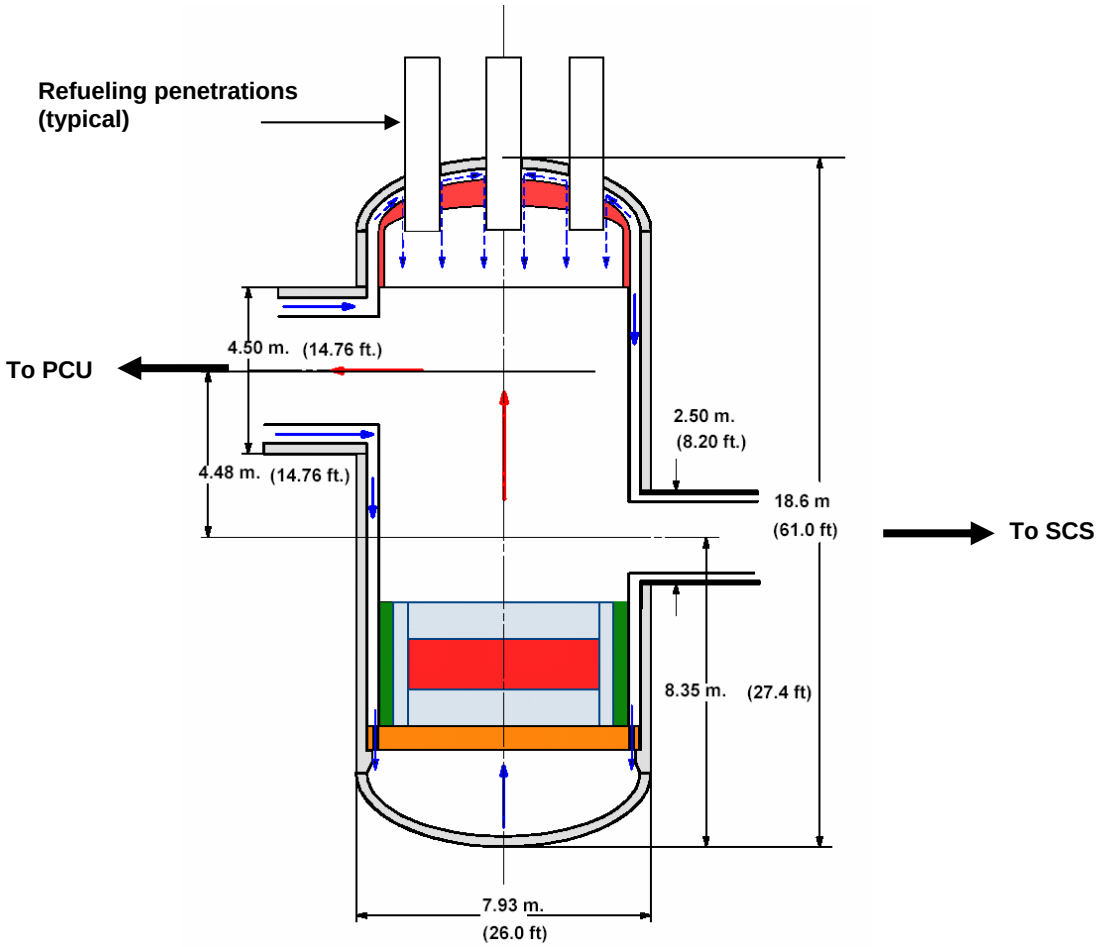

The indirect cycle (He to He) 2400MWt Guard Containment (GC) option was also evaluated, again using a 5 Bar GC Pressure. The Modular Helium, Gas-Cooled reactor (MHR) circulator design was chosen, and a downcomer annulus was selected for the cold helium flow to core inlet. Other options were considered and are discussed in Ref 1. This choice provides a flow path for the SCS cold flow return to the core inlet. An elevation view of this option is shown in figure 2-5. A brief analysis indicated that ~40MW of pumping power is required for the circulators for a total pressure drop of 140kPa. With some reserve included, this would increase to ~50MW and would require 9 circulators using the MHR motor design size of ~5.7MWe. The blowers are about 6m tall (including motor) and 2.2m in diameter (axial - 2 stage blower). The location and mounting of these blowers is seen as a difficult problem for the indirect cycle. One possibility is to mount the circulators as closely as possible to the sides of the reactor vessel and to take the SCS/ECS system out the top (or to the top) of the RV.

The resulting GC envelope, shown in layout view in figure 2-6 and in elevation view in figure 2-5, is rather large and the PCU is located outside of the GC. Another option is to go to an eccentric layout, which reduced the GC diameter by about 20%, but requires a 7' thick GC wall. It was felt that further work was needed on the indirect cycle design.

Fig. 2-5: 2400MWt Indirect Cycle Guard Containment Envelope - Elevation View.

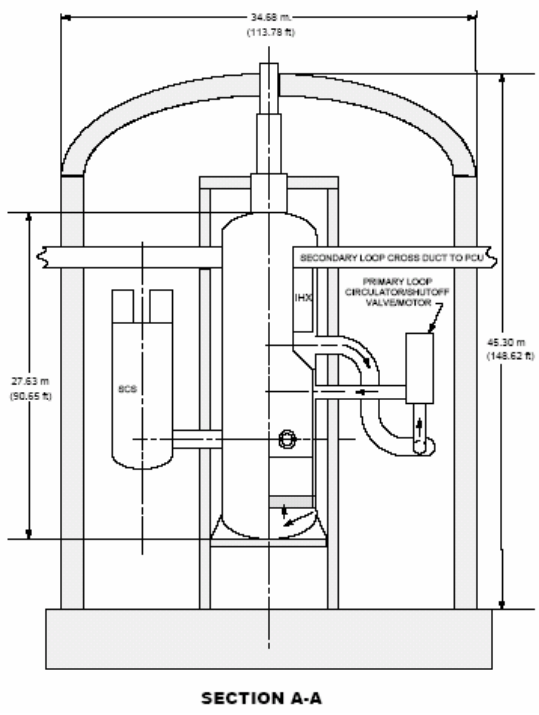

Fig. 2-6: 2400MWt indirect cycle Guard Containment envelope - layout view

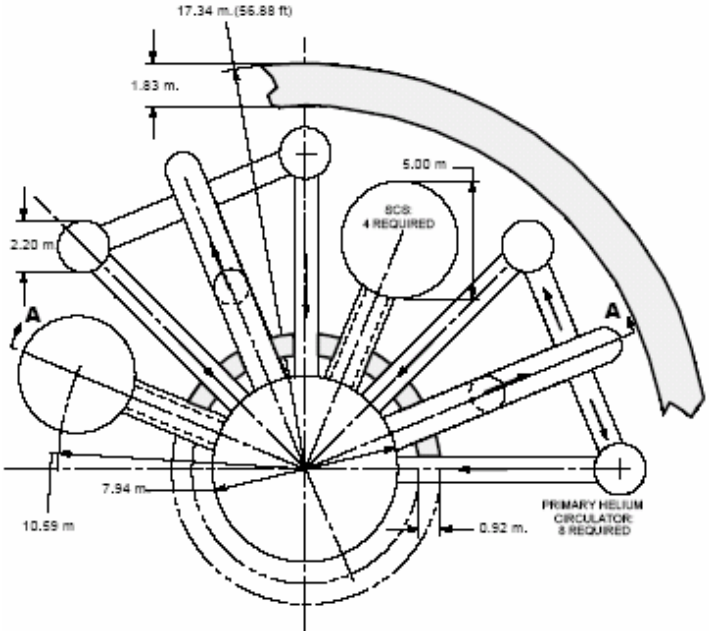

3. New Guard Containment Design Studies

3.1 Guard Containment Layout and Support Structures Design for the 2400MWt Plant

The initial phase of the new GC design studies for the 2400MWt GFR focused on the layout for the direct cycle option. For the concrete in the GC to retain its strength the normal operating temperature must be held below 93°C (200°F), and no hotspot can exceed 315°C (600°F). A brief analysis indicated that temperatures to be expected under accident conditions in the GC would exceed these limits. A detailed CFD analysis performed by ANL on the GC design shown in figure 2.1 (Ref 3), showed that these temperatures would be exceeded under both normal and accident conditions even with an insulated SCS.

To avoid this problem the GC design was revised and enlarged to include not only the RV but the PCU vessels and the SCS units as well. An open internal containment option was designed using metallic support structures for the reactor vessel, the PCU vessels, and the SCS units. The PCU vessels have the same overall dimensions as that designed for the 600MWt GT-MHR (Ref 4), and are supported at cross vessel elevations in five places with four snubbers for lateral seismic restraint at the bottom. The vertical supports at the cross vessel elevation allow for axial movement due to thermal expansion along the cross vessel axis and also permit Y axis movement due to differential thermal expansion effects. The RV is supported in a framing structure of tube steel columns and horizontal beams to allow for cross vessel and piping penetrations while restraining horizontal movement and with snubbers for lateral seismic restraint. The SCS units are supported on steel braced framing, and the SCS duct from the RV takes the additional moment due to any growth of RV in the downward direction. An elevation view of this layout is shown in figure 3.1.1.

As shown in figure 3.1.1, a flat roof structure was adopted for the open GC rather than a dome-like structure. This provides a lay down area for equipment if needed during core refueling, and simplifies fuel cask transfer to the storage area. The RV support framing provides internal support to the long span flat roof top slab and can reduce the thickness to 2m depending on embedment and unit location. On the bottom, the GC is attached to a foundation mat, 5m thick, as indicated in the figure. The GFR design is similar to the Peach Bottom I design (Ref 5) in that it has an upflow core to aid in cooling under loss of pressure or forced flow conditions. As in the Peach Bottom reactor, the control rods are inserted from the bottom and withdrawn below the lower head to minimize their operating temperatures. Access to the control rods for maintenance and repair is through a “sub-pile Maintenance Room” as shown in figure 3.1.1. The height of the GC is dictated by the dimensions of the PCU vessels, and this height in turn sets the reach required of the refueling system, which is 35.3m as indicated in the figure. Since the refueling arm and the fuel elements have to be withdrawn into a transfer cask and refueling machine, this in turn sets the height requirement for the reactor building (70.0 meters). The reach of 35.3 meters for refueling is feasible and the penetrations in the top head will be designed with adequate stiffness to allow for smooth refueling without any significant alignment problems for the given reach

A plan view of the new GC layout including the plant building and refueling areas is shown in figure 3.1.2. This view shows the overall reactor building width and length (45m by 90m) and the diameters of the GC, the 4 PCU vessels, the RV, and the 4 SCS units. The GC has an outside diameter of 37 meters, and a wall thickness of 2 meters. The structures for the various units inside the GC are also shown along with the access to the Sub-pile Maintenance Room. The access to the sub-pile room is through the galleries provided in the foundation mat. Three refueling penetrations are shown on the RV in the layout. The central one is for the refueling arm itself, and the other two are for removal of the individual fuel elements into the fuel transfer cask located on the roof of the GC.

Figure 3.1.3 provides a cross section view through the reactor core and gives the dimensions of the core, the reflector and shielding, the core barrel, the downcomer. 2¼Cr-1Mo steel was selected for the Reactor Vessel Wall and the vessel dimensions including vessel thickness are also shown in the figure.

The steel support framing structures are sized to support a combination of the dead, live, and seismic loads imposed by the PCU and RV vessels and the SCS units. The dimensions and weights of these vessels, derived from prior studies (Ref 1), are given in Table 3.1.1 below.

Table 3.1.1: Dimensions and Weights for the PCU Vessels, the RV, and SCS Pods

PCU Vessel (Total of 4 - Parameters given for one unit):	
Height, m	39.09
Inside Diameter (ID), m	6.9
Cross vessel elevation, m	15.3
Weight of vessel only, MT	1530
Weight of fully assembled unit with TC, Gen, etc., MT	2840
Load-carrying capacity of overhead cranes, MT	320
Reactor Vessel:	
Weight of vessel only, MT	1159
Height, m	20
Inside Diameter (ID), m	7.38
Weight of RV with active core, core support, shielding etc., MT	2050
Cross vessel elevation, m	17.6
SCS Pod (Total of 4 - Parameters given for one unit):	
Weight of vessel only, MT	73
Height, m	6
Inside Diameter (ID), m	4.8
Weight of SCS with Heatric HX, Blowers, Pipes etc., MT	111
Cross vessel elevation, m	13.1

Fig. 3.1.1: 2400 MWt GFR Reactor Building Elevation View

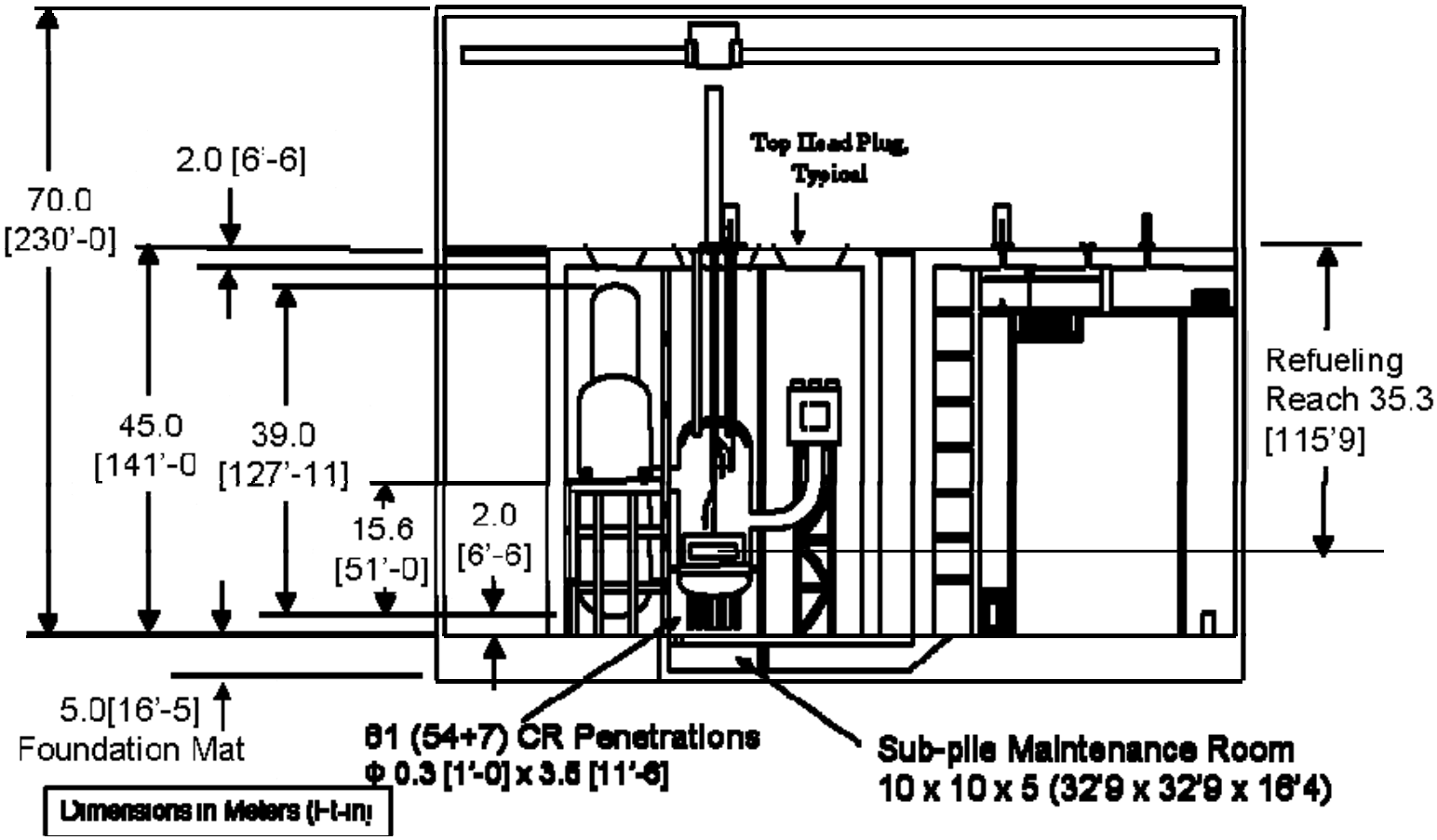

Fig. 3.1.2: 2400MWt GFR Guard Containment Layout – Plan View

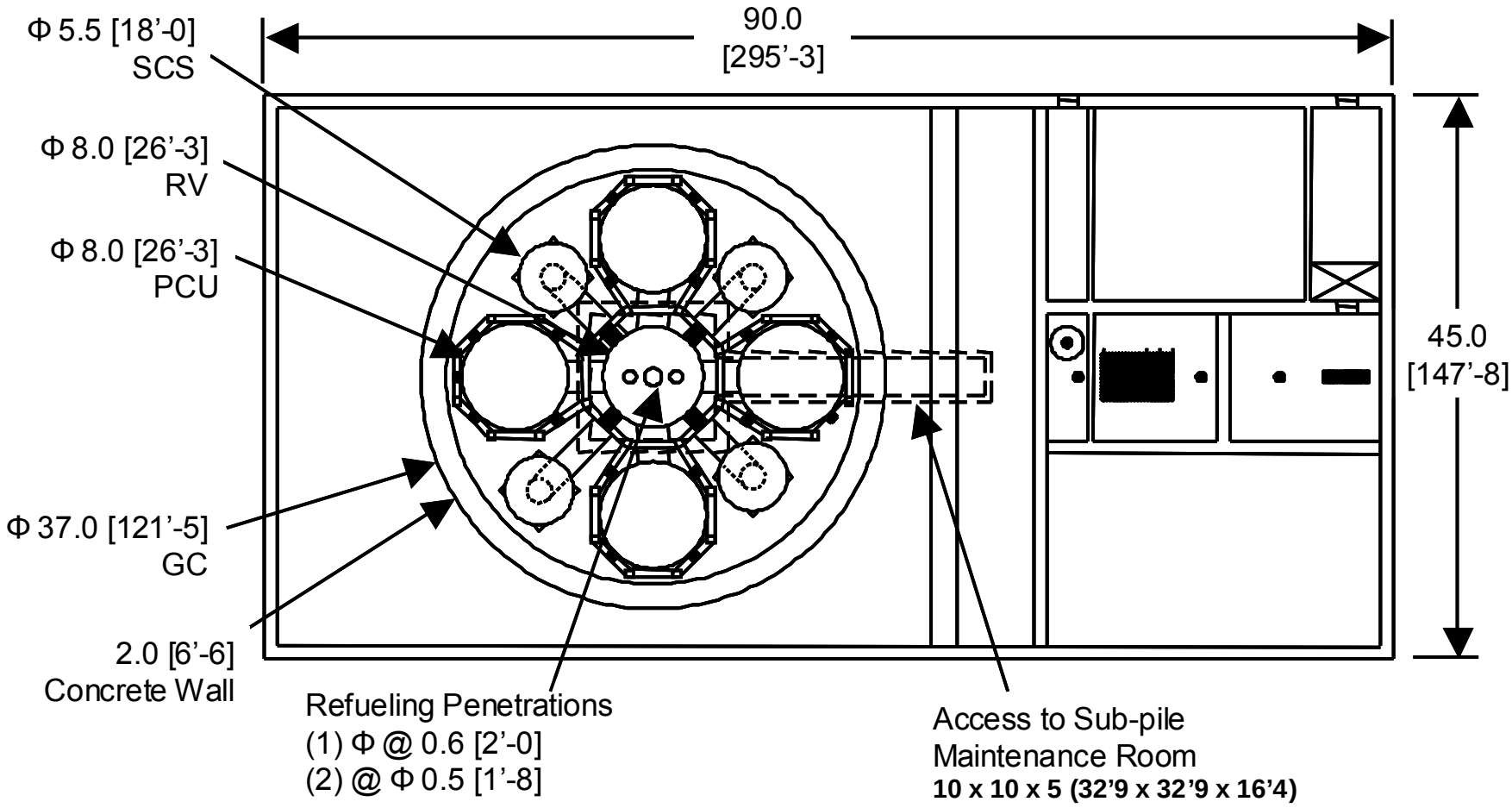

Dimensions in Meters (Ft-In)

Fig. 3.1.3: Section through Reactor Core

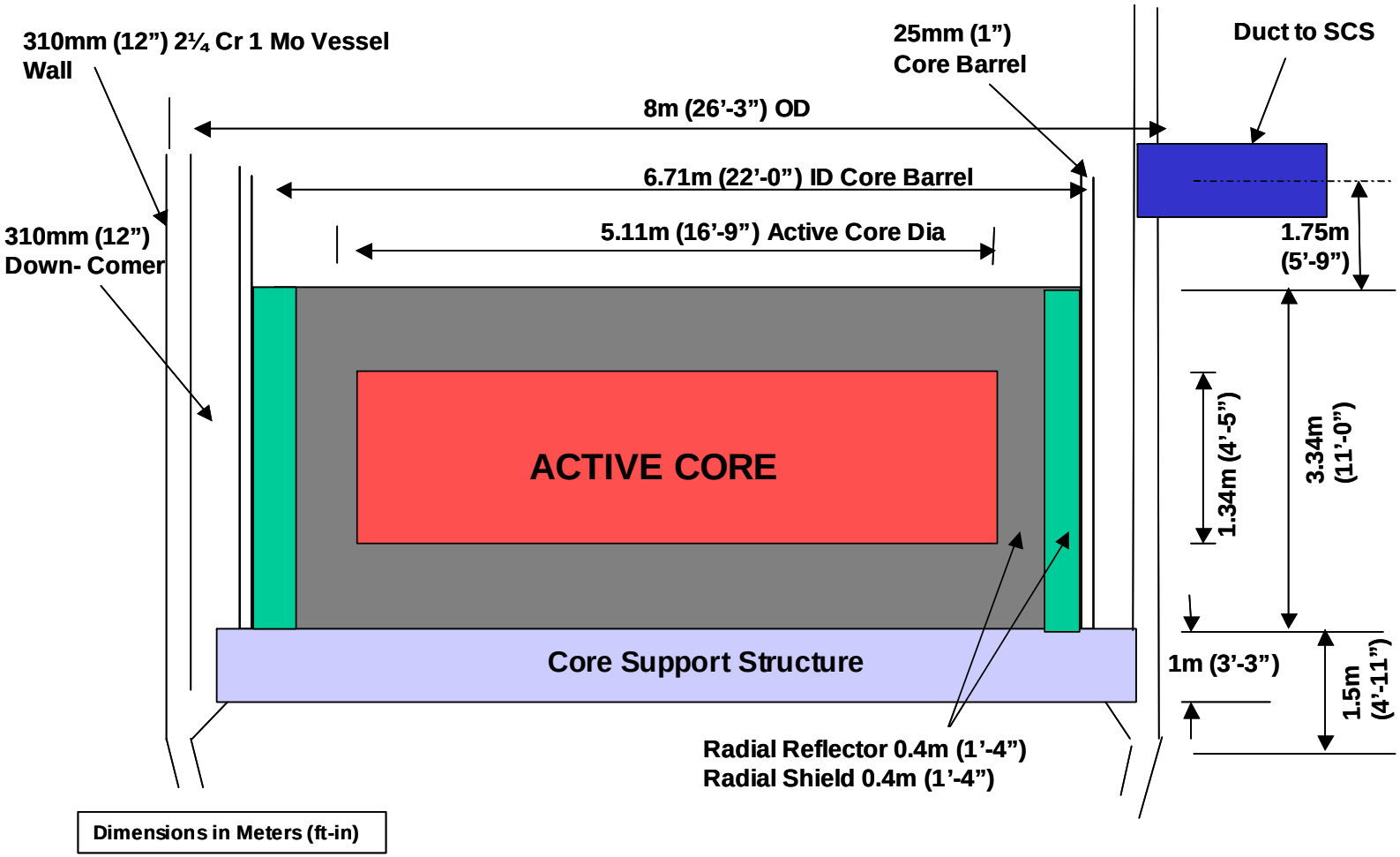

A more detailed view of RV and the SCS units is given in figure 3.1.4 showing the dimensions of the various components. While a steel braced framing structure has been used to support the SCS unit, it may be feasible to support the SCS units from the GC wall and/or the PCU support framing provided they can be adequately insulated. Cost and trade off studies should be performed on this design when the overall plant is better defined.

Details of the support system for the RV, the PCU vessels, and the SCS units, are shown in figure 3.1.5. Horizontal movement of the RV is restrained through the use of keyed vertical supports at the cross vessel elevation. Hydraulic snubbers at the bottom of the RV located horizontally above the bottom dome at about the elevation of the core support structure provide the needed seismic support while permitting radial thermal expansion of the vessel. Also above and below the vertical supports the RV is free to expand in the upward and downward movement due to thermal expansion. The Guard Containment wall is 2m thick and is also shown along with some cross section detail of its composition. A 12mm (1/2") thick steel liner (ASME SA 285 Grade C steel) forms the inside face of the GC and is attached as shown in the detail. Typical rebar curtain for the GC concrete is also shown in the side walls with provision for prestressing. Additional details of the RV support system are shown in horizontal cross section in figure 3.1.6. This support system is designed to provide restraint in the horizontal (X,Y) directions while allowing for radial expansion of the RV itself.

The SCS units are fixed at the bottom of the pod by anchoring to the supporting steel braced structure, and this restrains the SCS pod framing horizontally. It is estimated that the maximum vertical downward expansion of the RV due to temperature changes will be less than 1 cm (about 3/8"). Since the RV is fixed horizontally, the cross ducts connecting the RV and the SCS units will have to absorb the stress involved. These ducts are 7.6cms (3") thick and 2.5m in outside diameter, and can easily withstand the flexural stresses due to this small thermal displacement.

The RV support framing and details are shown in elevation view in figure 3.1.7. The framing is an open structure to minimize overall gas temperatures in the GC and to simplify the penetrations for the four cross vessels to the PCU vessels and the four cross ducts to the SCS units. The RV support framing consists of structural tube steel (TS) columns and beams pre-fabricated with plates and full penetration V-grove welding. All support framing structural material is made of ASME SA-285, Grade C steel. The PCU and RV steel framing are moment resisting frames, while the SCS framing is a braced framing structure. The ASME code permits using this steel grade material for temperatures up to 482°C (900°F), but severely curtails the allowable design stress to a low 5 ksi. During normal operation and up to 149°C (300°F), the allowable design stress permitted is 17.7 ksi, and the current framing sizes are designed to this stress during normal operation. The support structure for the SCS units is also open box type structure, and details are shown in figure 3.1.8. A steel box framing is also used, composed of ASME SA-285, Grade C steel, with full penetration welding of the box components as shown in the figure. Dimensions of the framing structure were selected to provide adequate load bearing capability and to take the lateral loads to prevent horizontal movement of the SCS units. The framing is also sized to allow passage of the cross duct through the structure. The

RV/PUC & the SCS support steel framing may have a reduced yield strength at the high temperatures; however, this problem can be avoided by the use of larger TS sections, which can be accommodated in the GC design. This is the main reason for using structural steel framing inside the GC rather than concrete framing. Structural concrete in the vicinity of high temperature components such as RV will not be able to withstand average temperatures more than 200^0F to 250^0F.

The support structure for the SCS units is a free standing braced frame structure with diagonal bracings also made of pre-fabricated TS columns and beams as shown in figure 3.1.8. The framing material is composed of ASME SA-285, Grade C steel. The braced framing can be laterally supported by the PCU framing at the top if additional stiffness is required. Dimensions of the framing structure were selected to provide adequate load bearing capability and to take the lateral loads to prevent horizontal movement of the SCS units. The framing is also sized to allow passage of the cross duct through the structure.

Fig. 3.1.4: Reactor Vessel and SCS Unit Elevation View

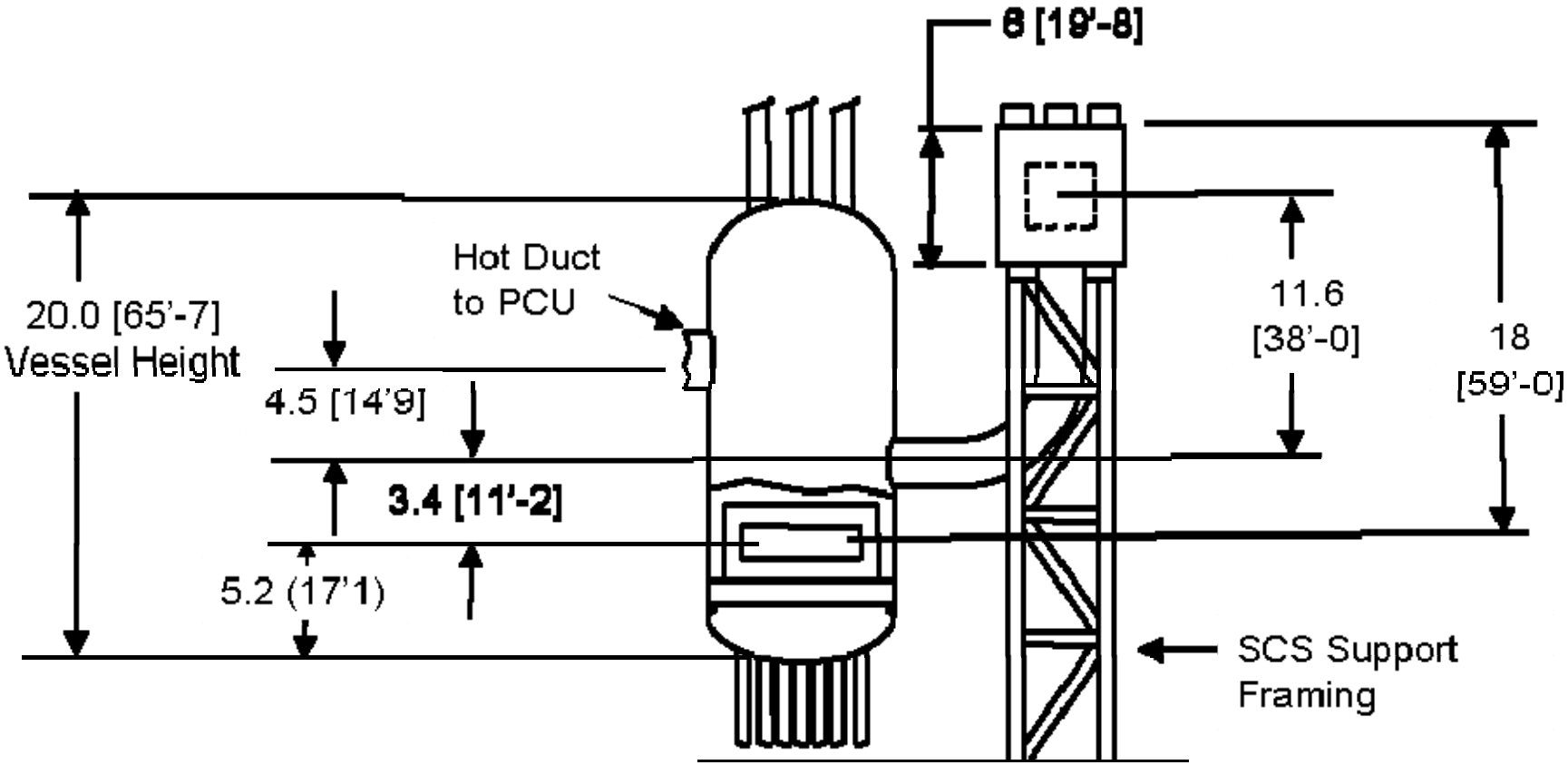

Fig. 3.1.5: Support Systems for the Reactor Vessel, the PCU Vessels, and the SCS Units

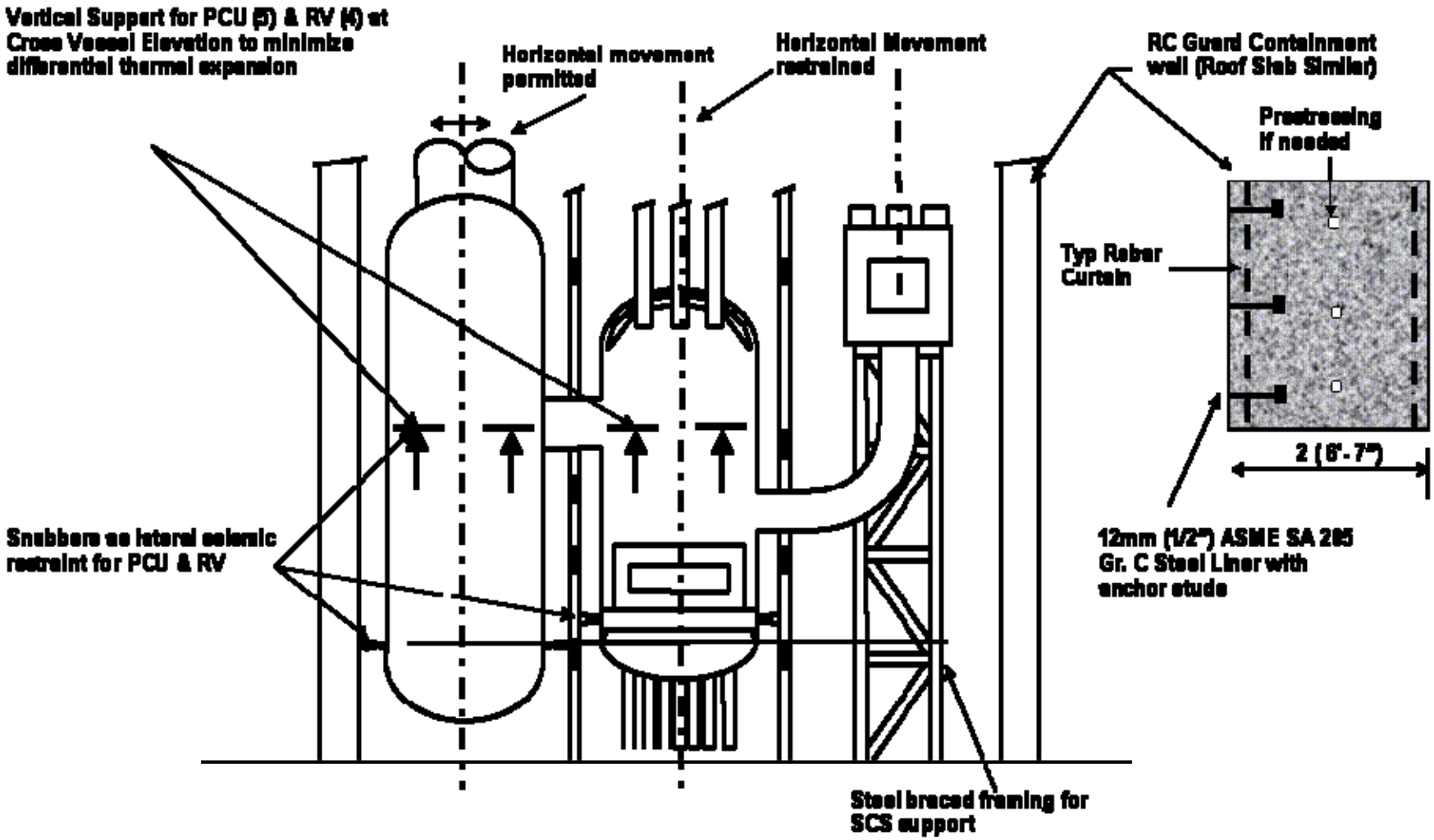

Fig. 3.1.6: Details of the Reactor Vessel (RV) Support System

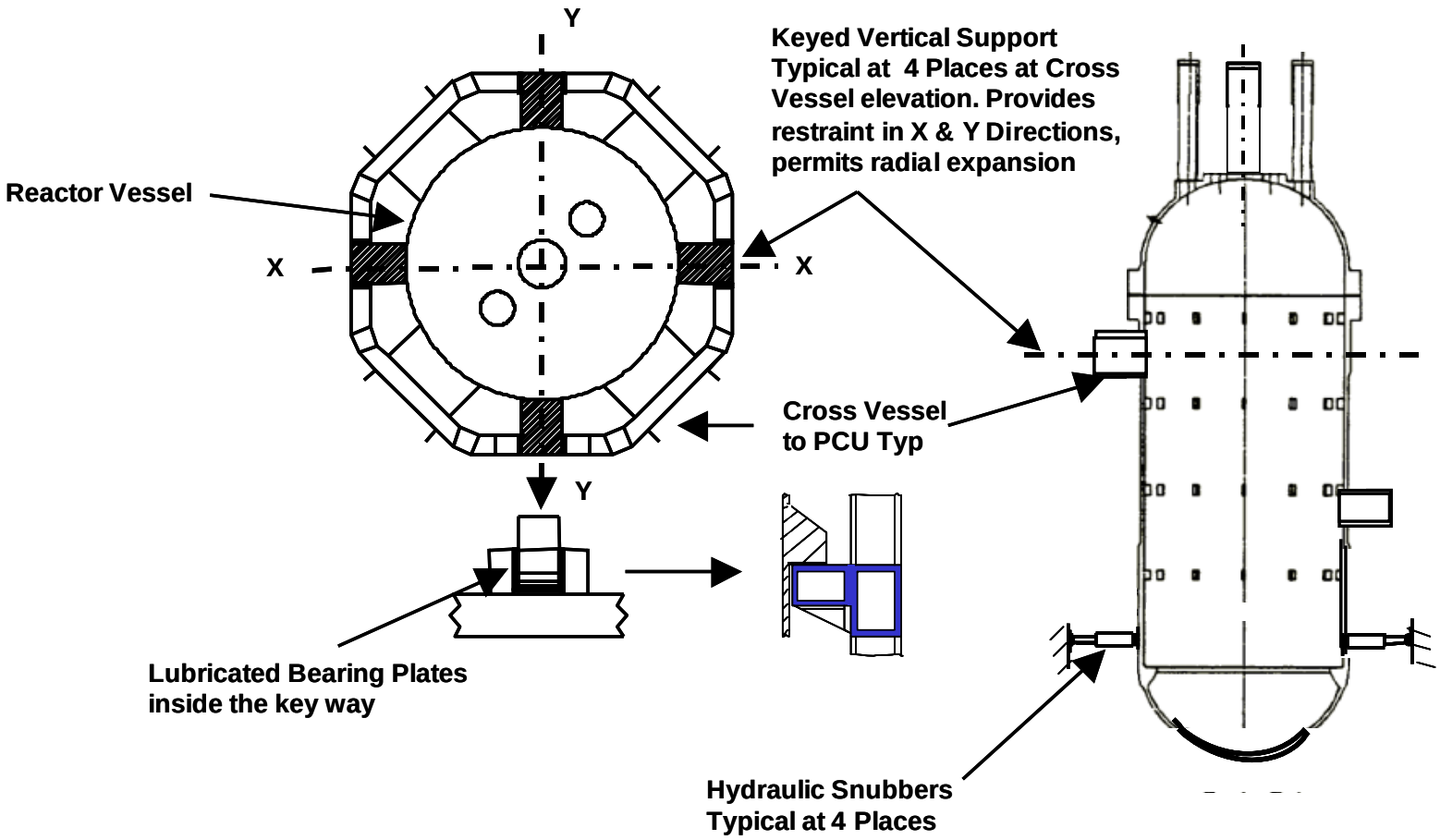

Fig. 3.1.7: Details of the Reactor Vessel Support Framing

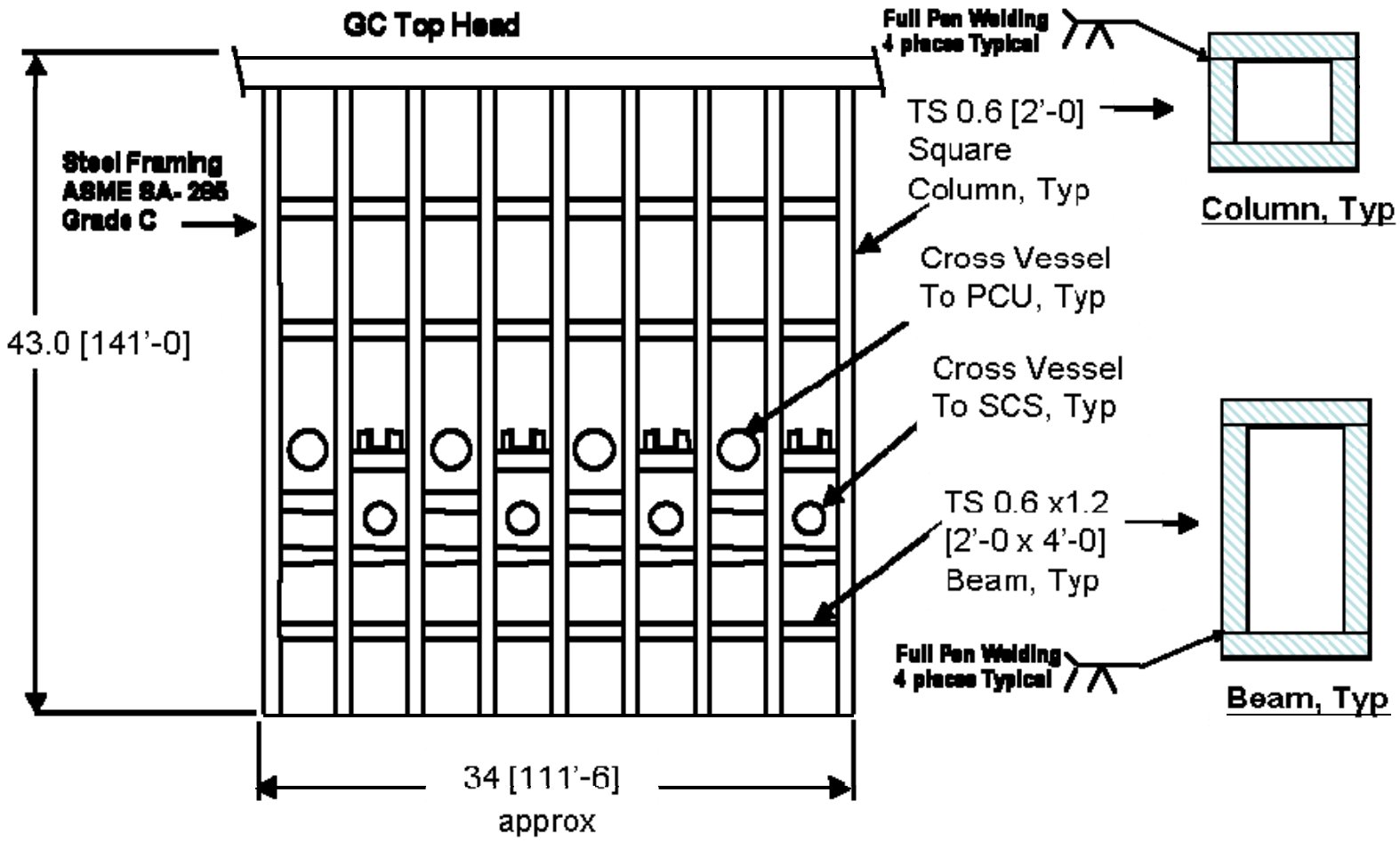

Fig. 3.1.8: SCS Unit Support Framing Details

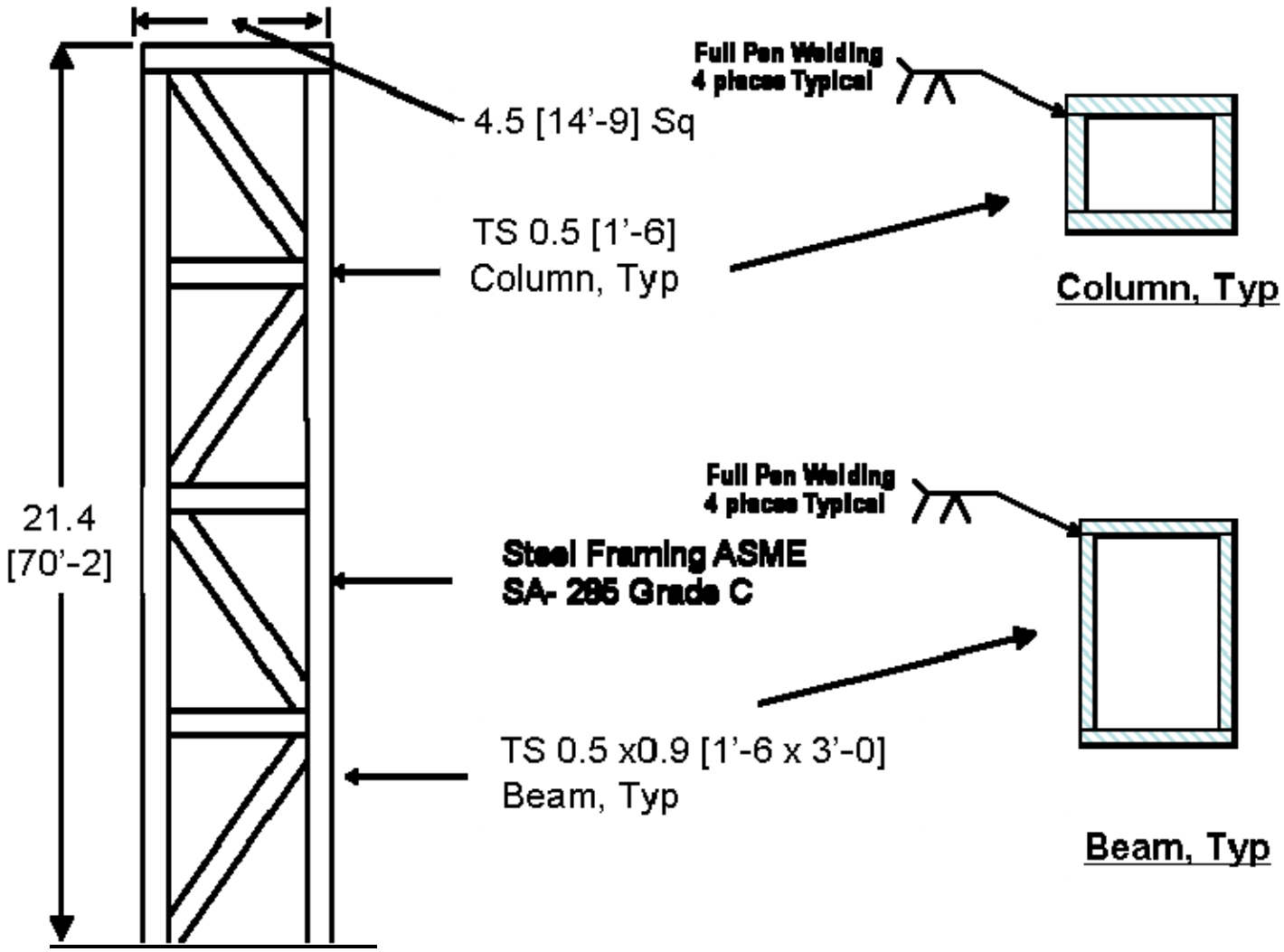

Details of the PCU vessels support system that was shown in elevation view in figures 3.1.1 and 3.1.5, are provided in figure 3.1.9, including the snubbers, anchors, and the wall attachments. As indicated in figure 3.1.1 the PCU vessel is supported in an open steel framework with vertical support provided at the cross vessel height similar to the support for the RV. The five vertical supports at cross vessel elevation transfer the loads to the moment resisting steel framing around the PCU. Four horizontal snubbers provide the needed lateral support and are attached the steel framing at the bottom. The snubbers permit the PCU vertical up and down thermal movements. They are similar to the vertical supports for the RV shown in figure 3.1.6, and are they designed to minimize differential thermal expansion. It should be noted that the PCU support framing is from the floor of GC to the cross vessel elevation and the framing itself can be laterally anchored to the adjacent GC walls if additional framing stiffness is required. The RV support framing however is from the GC floor to the GC top head. This framing serves a dual function, in that it not only supports the RV, but also provides support to the top head embedded concrete beams. The RV/PCU framing are laterally connected and act as one large framing structure during a seismic event.

Details of the snubbers and their mounting to the vessel wall and steel support framing are showing in figure 3.1.10. Details of the vertical supports for the PCU vessels and RV are shown in figure 3.1.11. A "Lubripad" is used between the vessel forging and the vertical support to permit independent horizontal movement. Further information on these "Lubripads" can be found at: http://www.usbfmi.com/lube1.htm

Fig. 3.1.9: PCU Vessel Support System Details

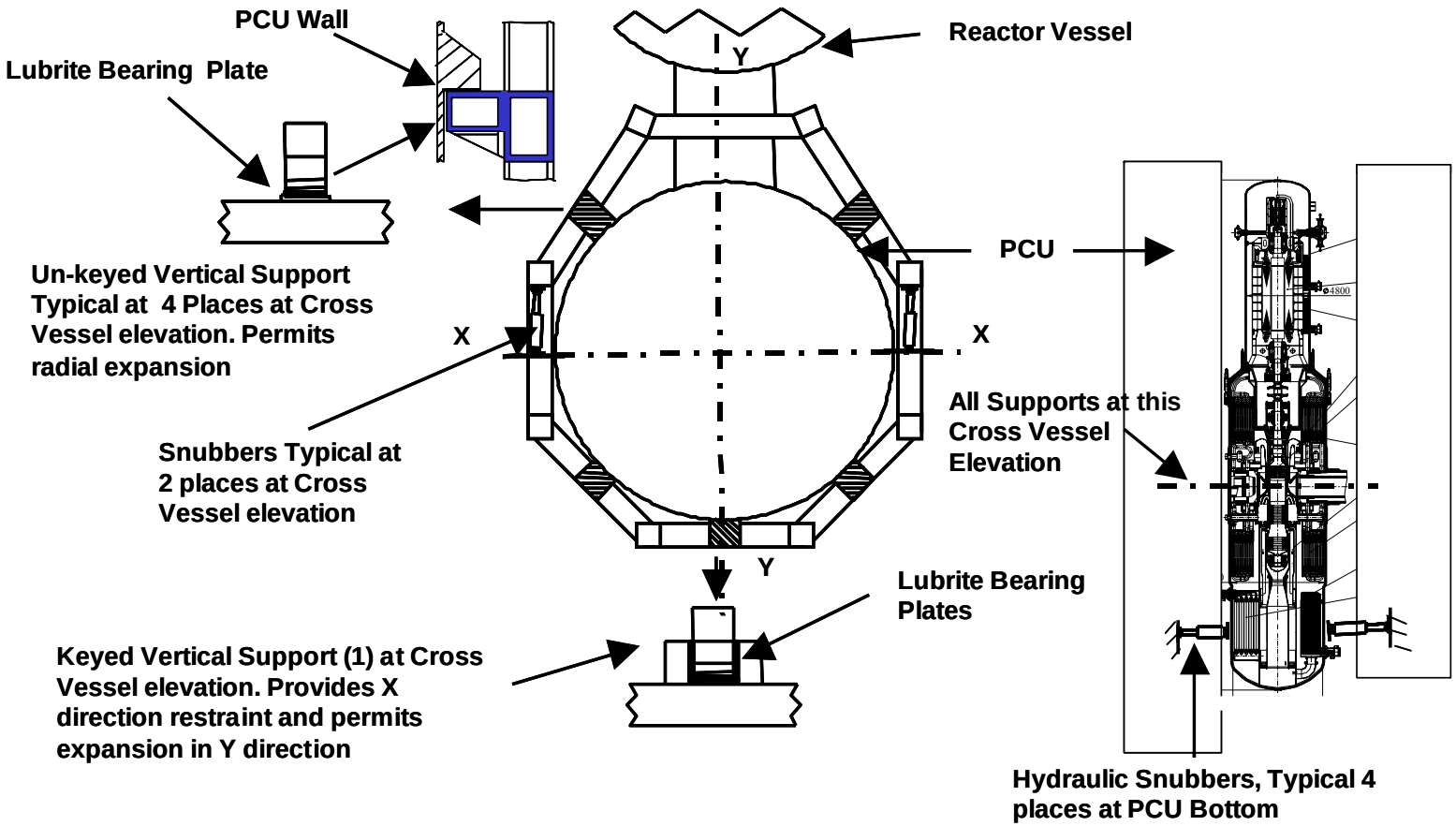

Fig. 3.1.10: Snubber Lateral Support Detail

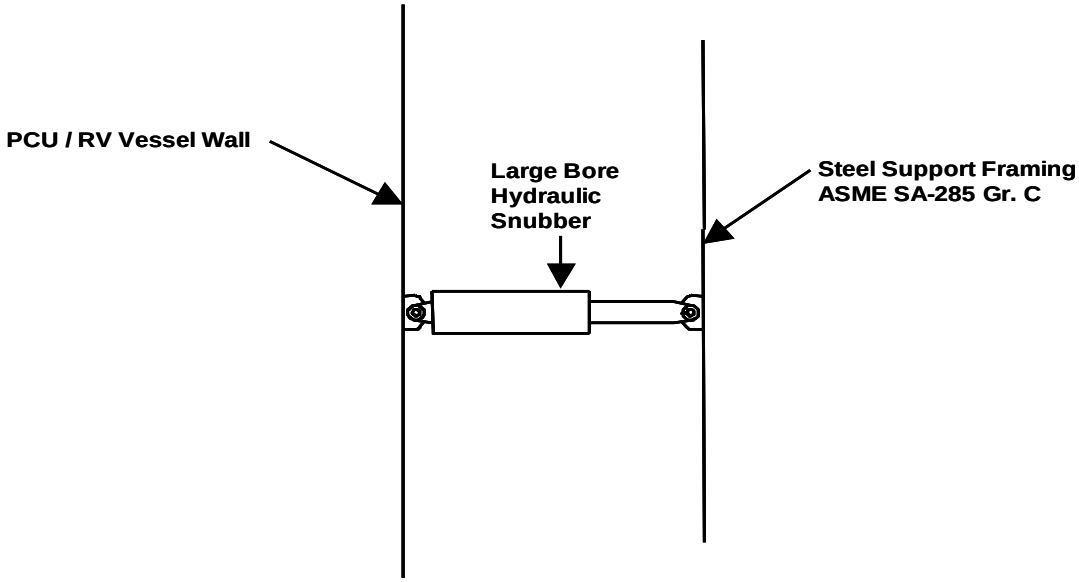

Fig. 3.1.11: Vertical Support Detail

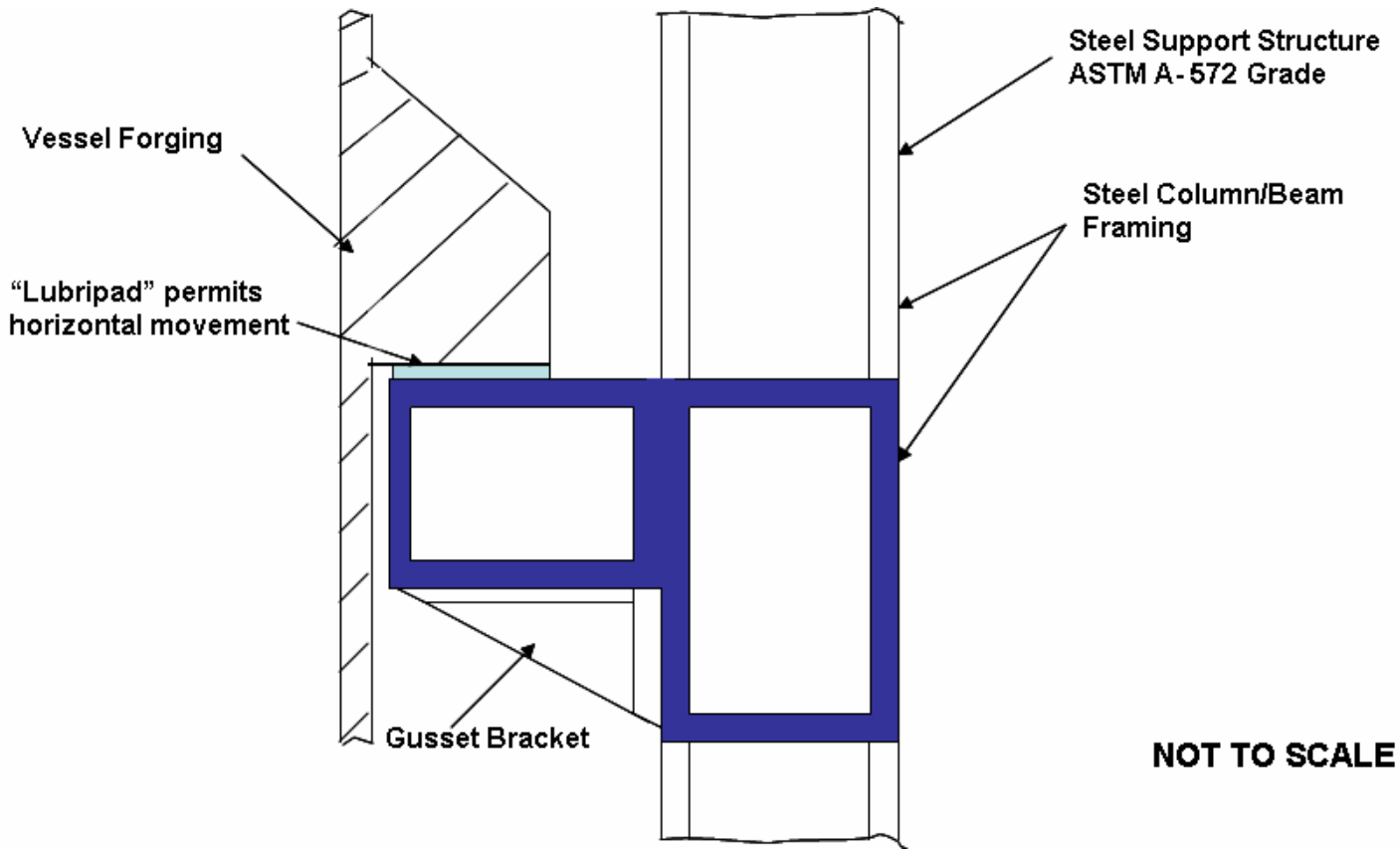

3.2 2400MWt Guard Containment Top Head Layout and Penetration Design

An initial GC design and layout for the 2400MWt GFR has been developed and evaluated for normal operating conditions (Ref 2). This is an open GC design, which encloses the PCU vessels and the SCS/ECS units as well as the Reactor Vessel (RV). In addition steel support structures were designed for all the vessels inside the GC. Core refueling penetrations and layout and equipment were also developed, and as discussed in sections 3.3 and 3.5, this layout was further evaluated for accident conditions and for site specific applications including fully above ground and partial embedment layouts.

This evaluation showed that a 2m thick reinforced concrete Guard Containment wall with prestressing is required to withstand accident (i.e., 8-bar gas pressure) conditions. Above ground and partial embedment (1/3rd below ground) were also evaluated to determine their effect on the design. Partial embedment reduces the required wall thickness from 2m to 1.7m and no prestressing is required for normal and accident conditions. The top head thickness is 2m in this case compared to a thickness of up to 3m for an above ground siting in a high seismic location (see Section 3.5), and includes embedded concrete beam framing. The GC layouts and wall thicknesses for both cases are shown in figure 3.2.1. However, as discussed in Section 3.5 and shown in figure 3.5.1, the side wall thickness remains 2m with possibility of side wall prestressing due to the presence of side wall penetrations and the fact that the GC has to resist an 8-bar accidental pressure.

Up to nine large, top head penetrations are required in the GC, one for the RV, four for the main PCU, along with four inner penetrations in the large PCU plugs for work on the upper generator portion of the PCU, plus 4 for the SCS/ECS. These penetrations also require Concrete Plugs for access to, or removal of, or maintenance of the components. The location of these penetration is shown in figure 3.2.2, and they are feasible with the embedded beam framework design supported by the RV steel support framing. The RV top head penetration plug is shown in elevation view in figure 3.2.3, and the PCU outer and inner plugs are shown in figure 3.2.4. The SCS/ECS Top Head concrete plug is shown in figure 3.2.5. The concrete plugs for the top head penetrations will be held in place with high strength steel bolts, and the penetrations and plugs will be sealed with Omega/O-Ring seals. Details of this arrangement for the RV and PCU outer plugs are shown in figure 3.2.6, while similar detail for the SCS/ECS and PCU inner penetrations and plugs are shown in figure 3.2.7.

Fig. 3.2.1: Guard Containment Layouts and Dimensions for Above Ground and Partial Embedment

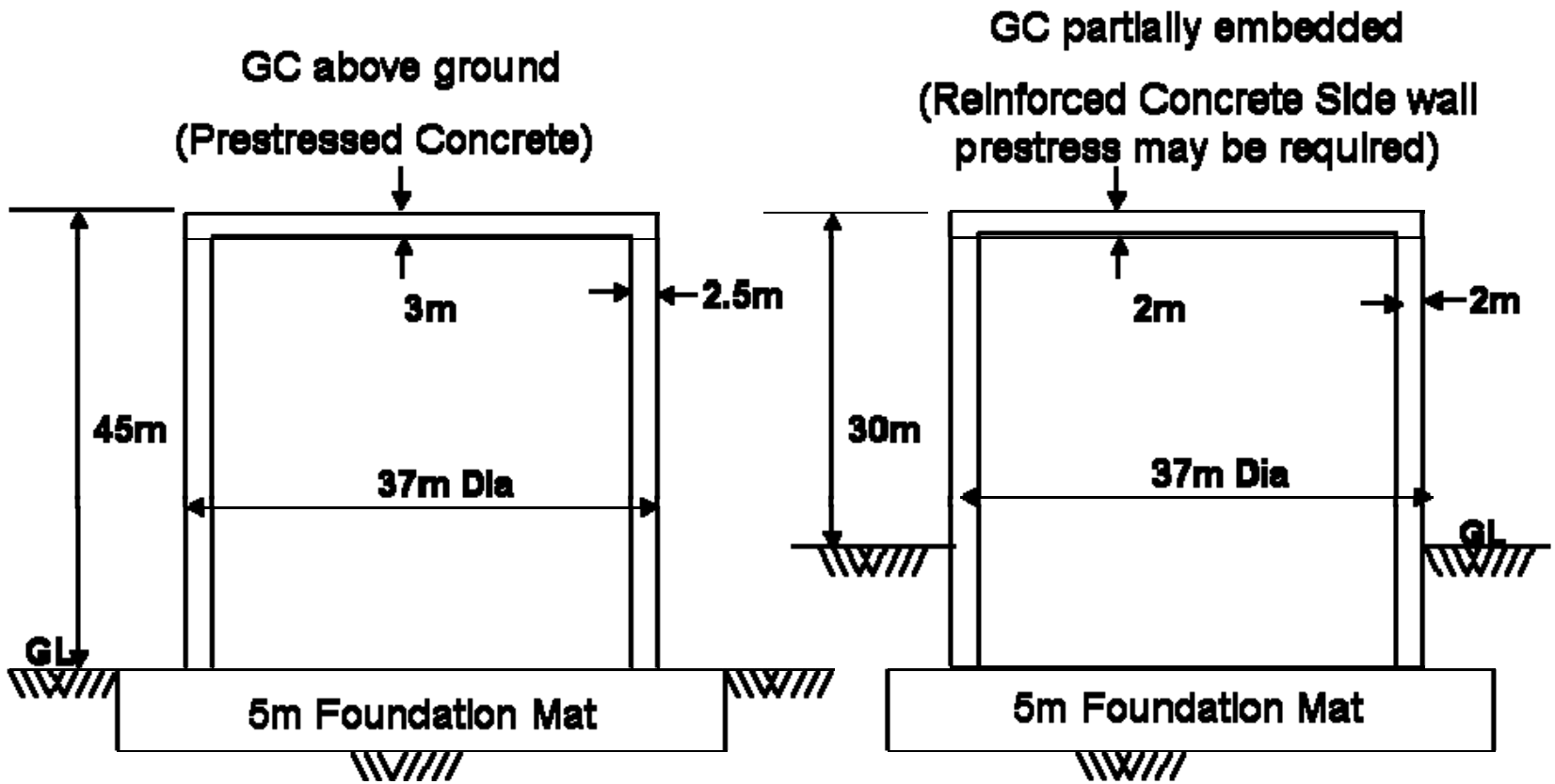

Fig. 3.2.2: Guard Containment Top Head Layout

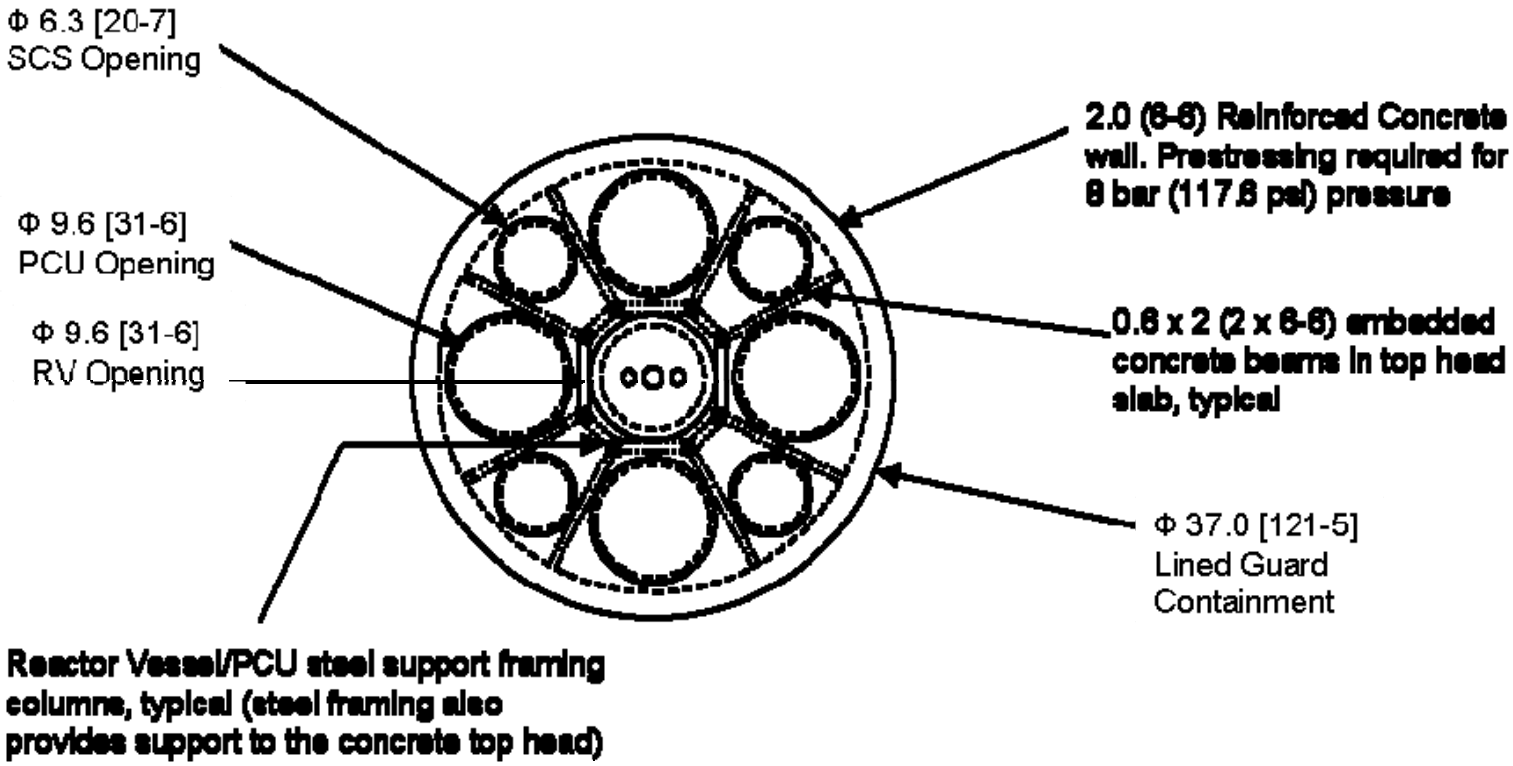

Fig. 3.2.3: RV Top Head Penetration Plug

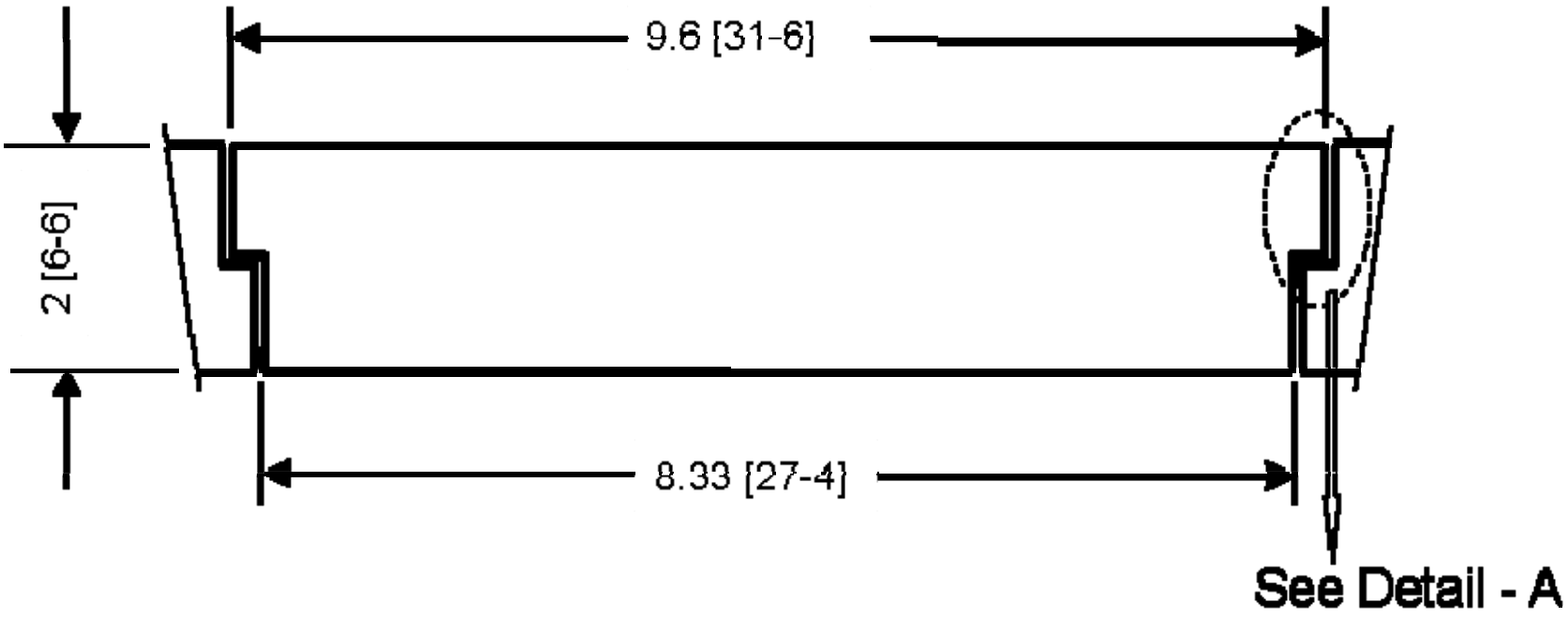

Fig. 3.2.4: PCU Inner and Outer Top Head Penetration Plugs

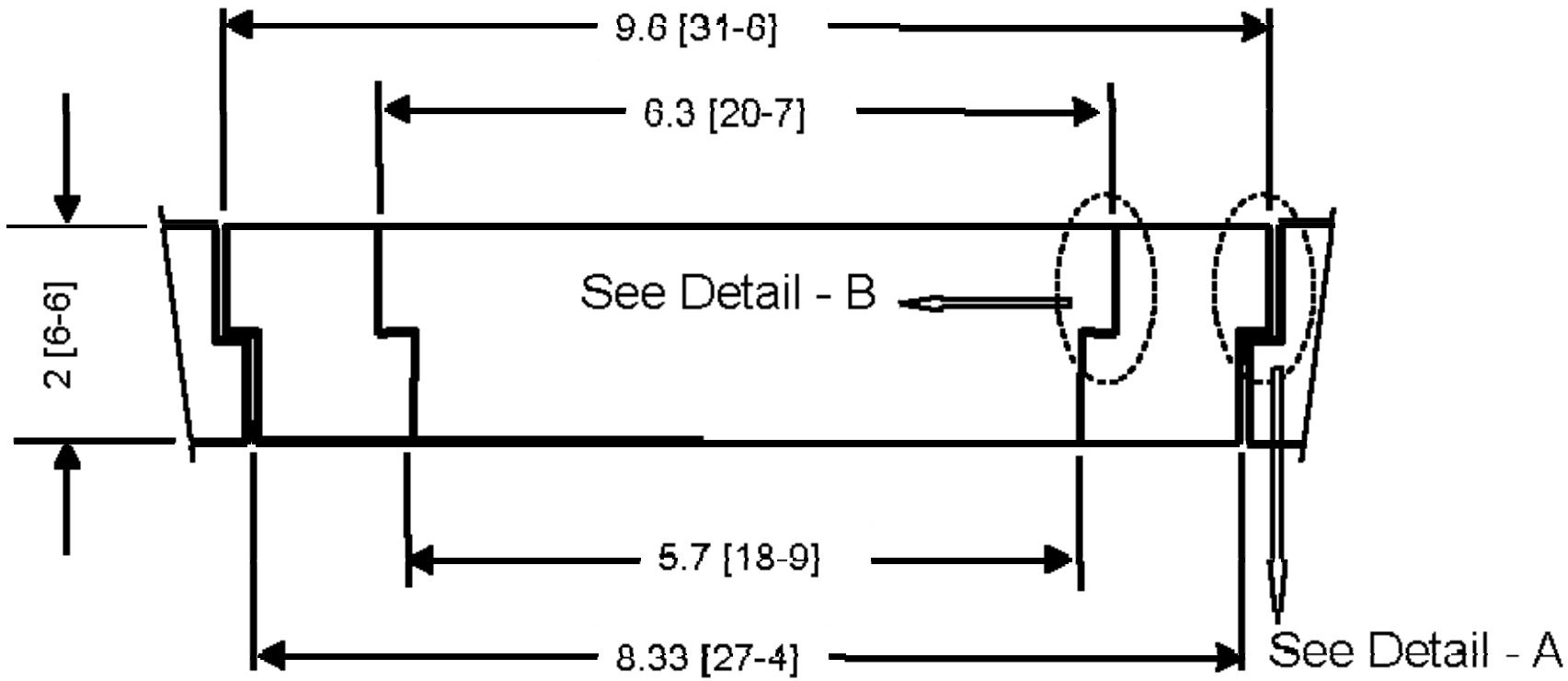

Fig. 3.2.5: SCS/ECS Top Head Penetration Plugs

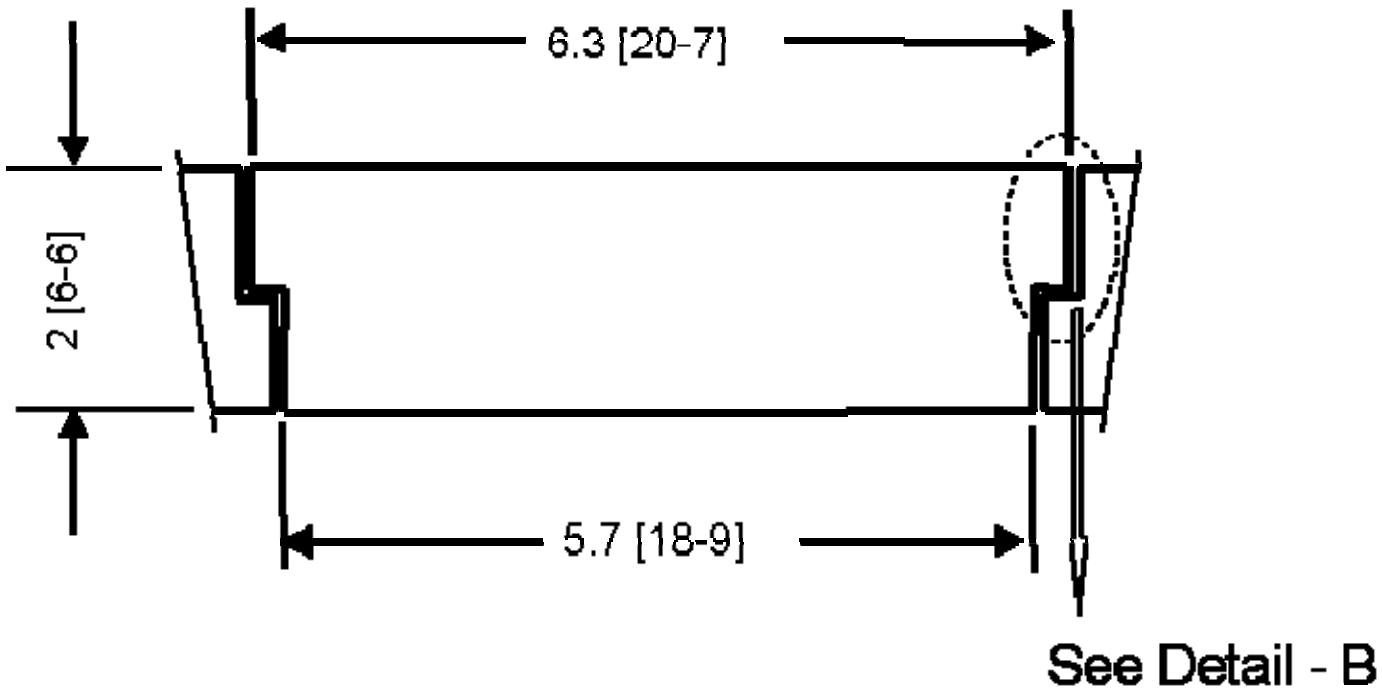

Fig. 3.2.6: RV and Outer PCU Top Head Penetration Plugs Detail - A

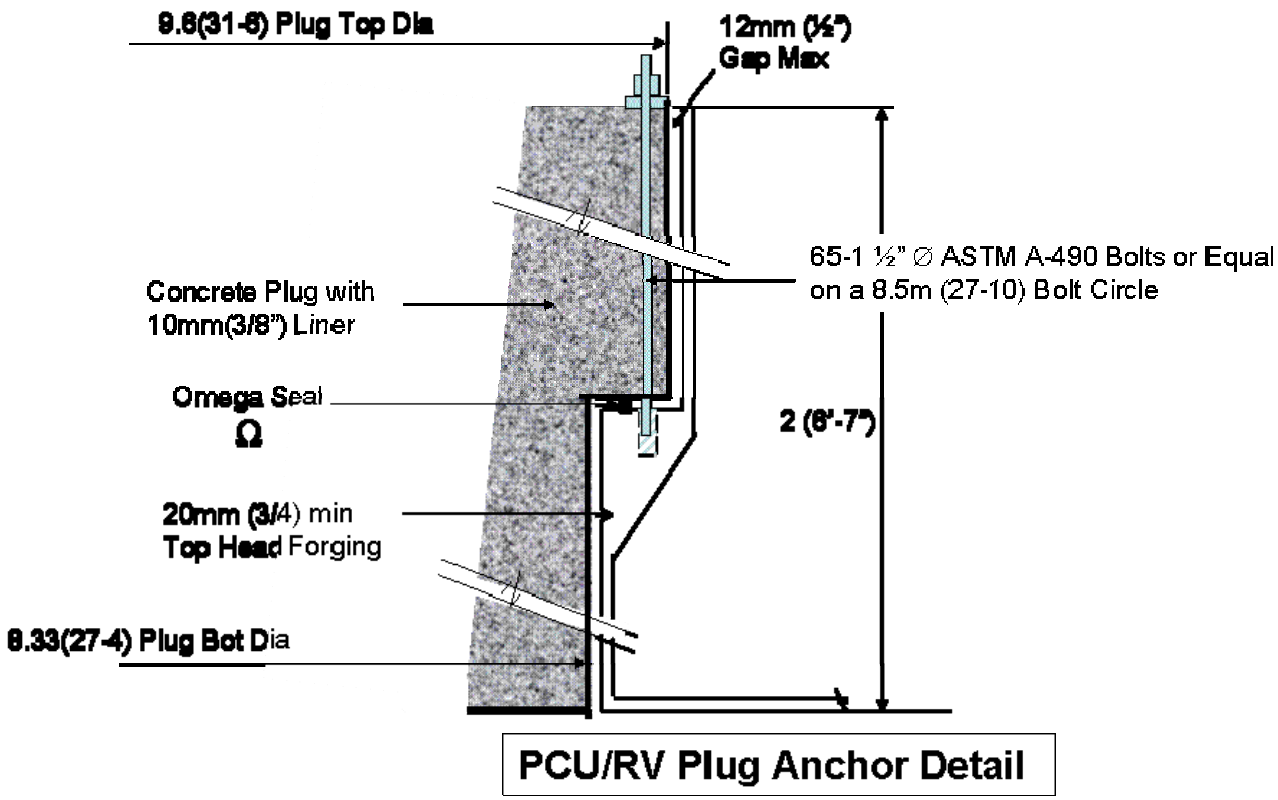

Fig. 3.2.7: SCS/ECS and Inner PCU Top Head Penetration Plugs Detail - B

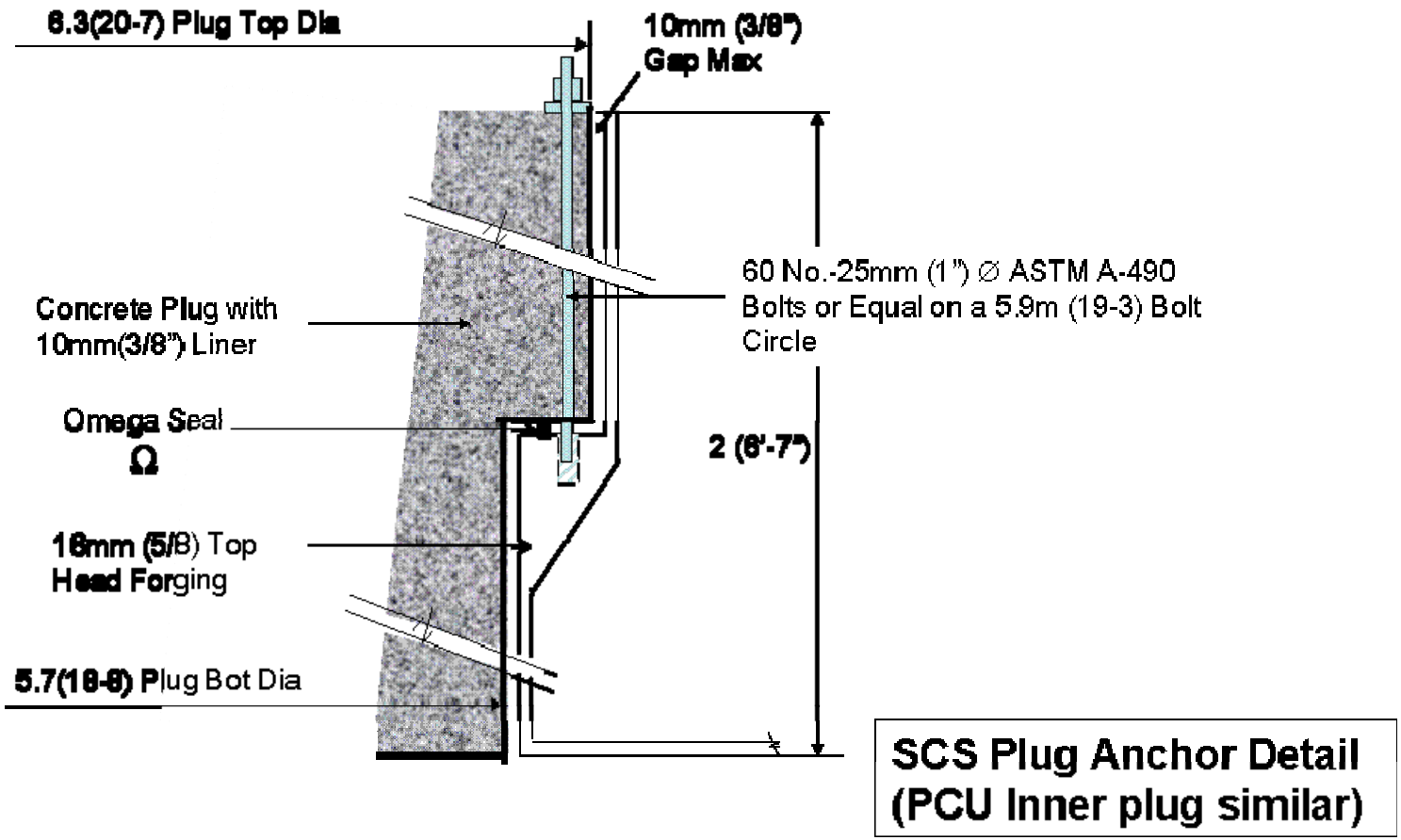

3.3 2400MWt Guard Containment Side Penetration Study

Initially it was assumed that the piping from the PCU and SCS cooling systems would be collected into a single large piping penetration per vessel in the side wall, and this arrangement is shown in figure 3.3.1 for the PCU penetrations. The purpose of this approach was to minimize the potential for leakage through the side penetrations. This design requires four PCU penetrations each 1m (3'-4") in diameter, and four SCS/ECS penetrations each 0.75m (2'-6") in diameter. These side wall penetrations would be held in place with high strength bolts and would use Omega/O-Ring seals which can contain an 8-bar accident pressure without failure.

However, a review of a leakage analysis performed on a similar arrangement for the Gas-Cooled, Modular-Helium Reactor (MHR) showed that this was not the case and in fact the smaller penetrations result in less total leakage than the fewer, but larger, headers. Also, larger penetrations in the side wall will significantly increase the side wall thickness to satisfy high concentration of flexural stresses in the GC concrete. So a decision was made to provide for individual penetrations for each of the pipes exiting the side of the GC, i.e., four for the PCU and two for the SCS/ECS coolant pipes. These penetrations are inlet and outlet water pipes from PCUs & SCSs and are embedded in the concrete wall. A typical example of a 310mm (12") penetration through the side wall is shown in figure 3.3.2. The penetration consists of a Vanstone (or approved equal) flanges on either side of the wall, which permits the thermal growth and at the same time is leak tight. The containment liner inside the GC is field welded to the pipes to prevent any leakage during an 8-bar accident pressure. A total of 24 small penetrations would be required.

3.4 Evaluation of Guard Containment Design Under Off-Normal Conditions

The Guard Containment design discussed in section 3.1 and shown in figure 3.1.1 was evaluated for operation under off-normal conditions. This evaluation showed that the 2m thick, reinforced concrete Guard Containment wall with possibility of prestressing if required would be capable of withstanding accident (i.e., 8-bar gas pressure) conditions.

The GC concrete wall can withstand average temperatures of 250°F and peak temperatures up to 600°F. The RV/PUC support steel framing may have a reduced yield strength at the high temperature; however, this problem can be avoided by the use of thicker steel, which can be accommodated in the GC design. A liner for the concrete is not necessary for structural reasons and it would also tend to keep moisture in the concrete, but a ½" thick liner is acceptable if needed for other reasons such as in the design of penetrations through the concrete.

Fig. 3.3.1: Large Side Wall Penetration Study

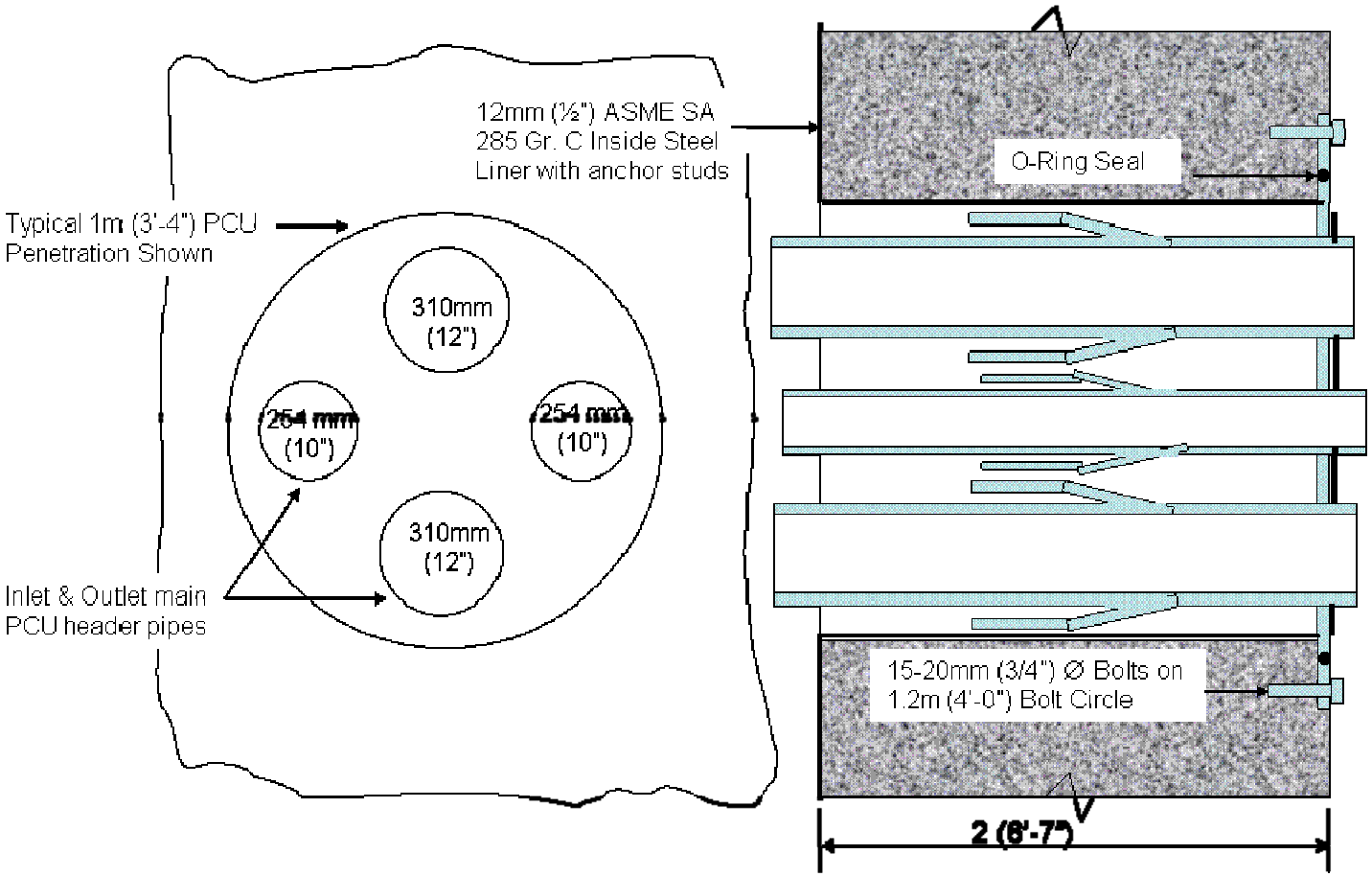

Fig. 3.3.2: Individual PCU and SCS Side Wall Penetration Example

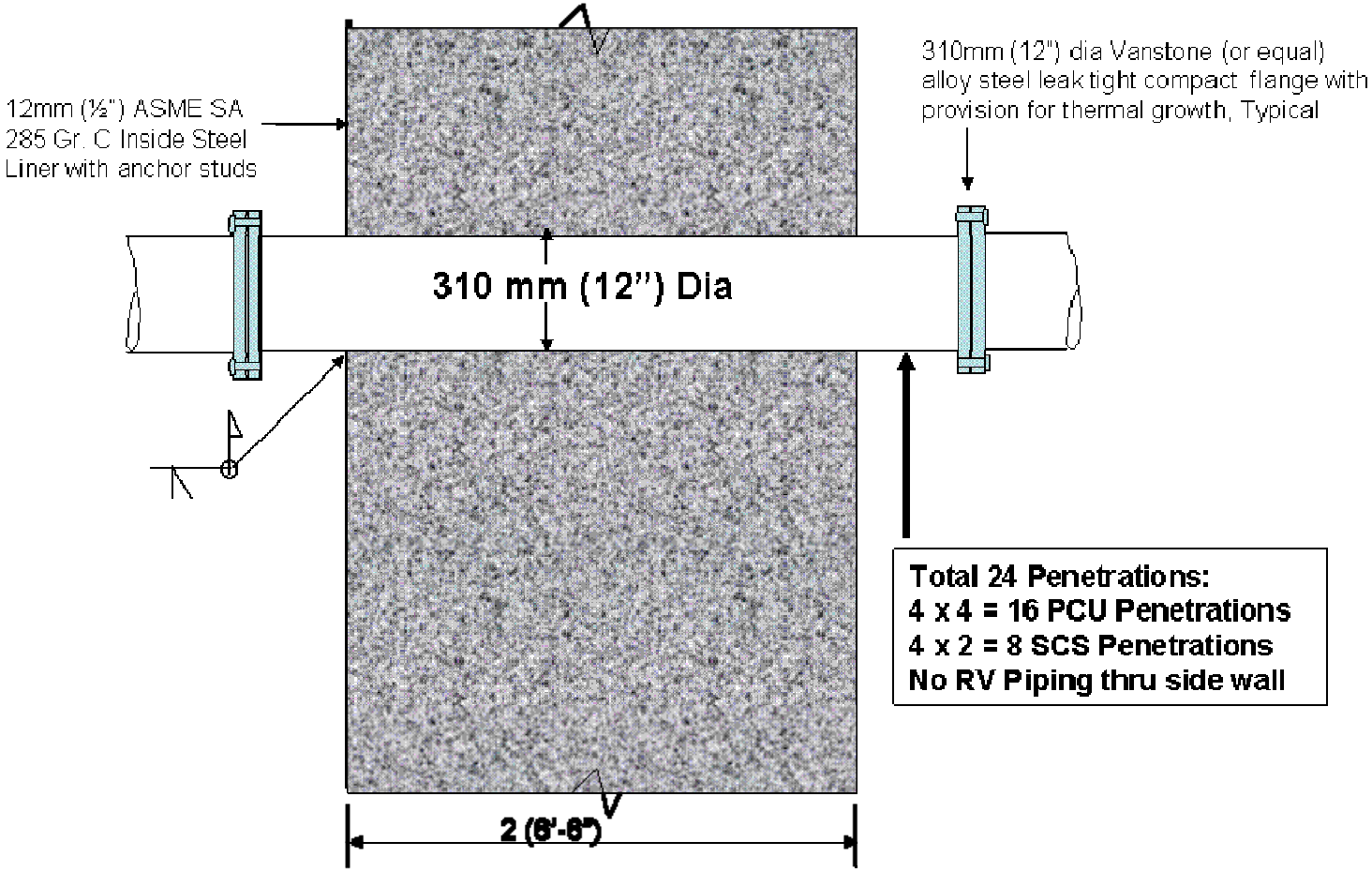

3.5 2400MWt Guard Containment Seismic Considerations

This evaluation showed that a 2m thick reinforced concrete Guard Containment wall with prestressing is required to withstand accident (i.e., 8-bar gas pressure) conditions. Above ground and partial embedment (1/3rd below ground) were also evaluated to determine their effect on the design and improvements in seismic response. The GC layouts and wall thicknesses for both cases are shown in figure 3.2.1. Partial embedment provides a significant improvement in seismic resistance. A very brief evaluation for a California type seismic event (seismic zone 4 considered) showed that embedding the GC 15m (1/3 partial embedment) into the ground considerably reduces any motion or swaying of the GC and yields a better design, which may be acceptable for a licensing standpoint in these earthquake zones. This embedment is shown in figure 3.5.1. If the water table is high, dewatering and water-proofing of the GC outside may be necessary. Partial embedment reduces the required wall thickness from 2m to 1.7m. However, due to the presence of at least 24 side wall penetrations, the side wall thickness was kept at 2m thick with ½" liner on the inside. In addition, some amount of side wall prestressing may also be required for normal and accident conditions. Also, the top head thickness was set at 2m because of the embedment, the concrete beam framing and the additional support provided by the RV steel framing supporting the top head of the GC.

Fig. 3.5.1: GC Partial Embedment Seismic Study

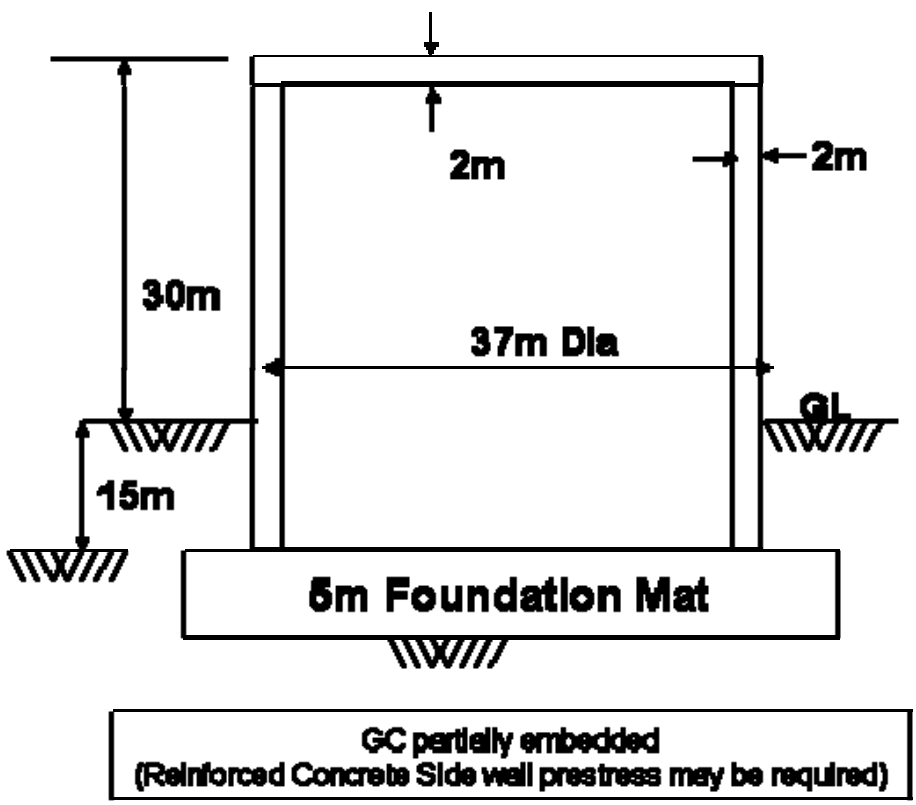

3.6 2400MWt Guard Containment Economic Evaluation

A brief evaluation was made of the material costs of the Guard containment and the internal steel support framing, based on the volumes and weights required and July 2006 San Diego FOB dollar costs. The results are summarized in table 3.6.1.

Table 3.6.1: Material Cost Estimates for the GC Concrete and Internal Steel

Concrete Cost Estimate

- **GC Lined Concrete***
  - Walls - 12,500 cyd x $525/cyd = $6.56
  - Top head (fc'-8000psi)- 3,500 cyd x $650/cyd = $2.29
  - Foundation 12,000 cyd x $450/cyd = $5.40
  - Total GC Concrete and Liner approximate costs = **$14.25M**
- **Top head concrete lined plugs with forging & bolts***
  - PCU Plugs (outer & Inner)- 4 x 200 cyd x $825 = $0.66
  - RV Plug with Penetrations – 1 x 200 cyd x $900 = $0.18
  - SCS Plugs – 4 x 100 cyd x $750 = $0.30
  - Total top head plugs approximate costs = **$1.14M**

Structural Internal Steel Support Framing Cost Estimate

- **Reactor Vessel Framing**
  - Columns and Beams (275kips+465kips)= 740,000 lbs x $12.50/lb = $9.25
  - Vessel Supports = 20,000 lbs x 18.50/lb = $0.37
  - Total Reactor Vessel framing approximate costs = **$9.62M**
- **PCU Framing**
  - Cols & Beams = 4 x (17.5m/43m)x $9.62M = $15.66
  - PCU Supports = 4 x 20,000 lbs x 18.50/lb = $1.48
  - Total PCU framing approximate costs = **$17.14M**
- **SCS Framing**
  - Cols & Beams = 4 x 160,000 lbs x $9.50/lb = $6.08
  - SCS Supports = 4 x 5,000 lbs x 8.50/lb = $0.17
  - Total SCS framing approximate costs = **$6.25M**

*fc'-5000psi unless noted otherwise

The results show that the Internal steel support framing is twice as costly as the concrete for the Guard Containment (~$33M vs. ~$15.4M), but the total costs would be a small fraction of the overall plant construction cost.

4. Conclusions

Prior work in the GFR program had concentrated on exploratory studies of a 600MWt modular-sized plant. Following that, an evaluation of the economics of the GFR and the challenges of fuel design at high operating temperatures led to a decision to look at a larger plant size, in this case with a 2400 MWt core. To minimize power conversion development problems with this higher power level core, the 600MWt module PCU design was retained so that 4 of these units were included in the plant layout. A brief evaluation of the plant layout led to the conclusion that a GC rather than a PCRV was the best choice from an economics standpoint, and an initial GC layout was developed with only the RV inside the GC inner cavity.

A more detailed review and evaluation of the GC design and layout for the 2400MWt GFR was performed this year. It was concluded that the initial choice with only the RV inside the GC inner cavity led to concrete temperatures in the GC that were above allowables for both normal operating and accident conditions. Based on this result, an open GC design was developed for the direct cycle plant, which encloses the PCU vessels and the SCS/ECS units as well as the RV in one cavity. In addition steel support structures have been designed for all the vessels inside the GC. Dimensions and ASME Section III Div 1 code permitted material selections have been chosen to support the vessels and units in the GC to allow for temperature induced changes, to ensure adequate seismic response of the vessels and components, and to minimize GC concrete temperatures during normal operation and under accident conditions. Cost and trade off studies should be performed on this framing structure design and on the overall GC design when the complete plant is better defined. Core refueling penetrations and layout and equipment have also been developed.

As a follow on to this work, the GC design was evaluated to ensure that the strength and thickness were sufficient to withstand the 8 bars internal pressure expected during an accident condition. A reinforced concrete Guard Containment wall (with prestressing if necessary) is required to withstand these accident conditions along with a 2m thick reinforced top head with the GC structure partially embedded (1/3rd the height in the ground). This partial embedment significantly reduces the seismic amplification of the GC, internal components and the support framing The design of large penetrations in the GC top head and the side wall penetrations were evaluated and layout prepared. The layout included the required cooling lines through the side walls of GC for the PCU and SCS components.

A brief evaluation was made of the material costs for the GC and internal steel framing. The results show that the internal steel support framing is twice as costly as the concrete for the Guard Containment (~$33M vs. ~$15.4M), but that the total costs would be a small fraction of the overall plant construction cost.

5. Acronyms

ASME	American Society of Mechanical Engineers
BOP	Balance of Plant
CFD	Computational Fluid Dynamics
cyd	cubic yards
ECS	Emergency Cooling System
GA	General Atomics
GC	Guard Containment
GCFR	Gas-Cooled Fast Reactor (original 1960's – 1970's design)
GFR	Gas-Cooled Fast Reactor (I-NERI program design)
GT-MHR	Gas-Turbine Modular Helium Reactor
M	Million (10^6)
m	meter
MHR	Modular Helium Reactor
MWt	Megawatts thermal
PCRV	Pre-stressed Concrete Pressure Vessel
PCU	Power Conversion Unit
RV	Reactor Vessel
SCS	Shutdown Cooling System

6. References

1. "Development of Generation IV Advanced Gas-Cooled Reactors with Hardened/Fast Neutron Spectrum – System Design Report," DOE report GFR023, February 2005

2. Venketesh, M., and Baxter, A., "Gas-Cooled Fast Reactor Guard Containment Design Mid-Year Report", GA-GENIV-050, April 2006.

3. "2400MWt Guard Containment CFD Analysis", Constantine P. Tzanos, presented at the 6th Cadarache-France/ANL-US Technical Workshop, Argonne National Laboratory, November 7-10, 2005.

4. LaBar, M.P., A.S. Shenoy, W.A. Simon, and E.M. Campbell, "The Gas Turbine-Modular Helium Reactor," Nuclear News, volume 46, Number 11, pg 28-37, October 2003.

5. Kohler, E. J., Everett:, J. L., III, "Peach Bottom Unit No. 1, A High Performance Helium Cooled Nuclear Power Plant," Transactions of ANS Meeting, San Diego, California, June 1978.