ORNL/TM-2003/244/R1

Updated Generation IV Reactors Integrated Materials Technology Program Plan

Revision 1

William R. Corwin

August 31, 2004

ORNL/TM-2003/244/R1

Updated Generation IV Reactors Integrated Materials Program Plan Revision 1

William R. Corwin

Date Submitted – August 31, 2004

Compiled by
P. J. Hadley

Prepared for
Office of Nuclear Science and Technology
AF3410000

Prepared by
OAK RIDGE NATIONAL LABORATORY
Oak Ridge, Tennessee 37831-6285
managed by
UT-BATTELLE, LLC
for the
U.S. DEPARTMENT OF ENERGY
Under contract DE-AC05-00OR22725

Table of Contents

Table of Contents i
Figures iv
Tables v
Acronyms vii
Acknowledgements ix
1.0 Introduction 1
1.1 Integrated Materials R&D Program 2
2.0 Reactor Concepts Materials Requirements 3
2.1 Materials Requirements for NGNP 4
2.1.1 NGNP Component Description and Operation Conditions 6
2.1.1.1 NGNP Pressure Vessels 6
2.1.1.2 NGPN Core Internals 9
2.1.1.3 NGNP Intermediate Heat Exchanger. 12
2.2 Materials Requirements for the SCWR 14
2.2.1 SCWR Component Description and Operation Conditions 14
2.2.1.1 SCWR Pressure Vessel 14
2.2.1.2 SCWR Core and Fuel Assembly Design 16
2.2.1.3 SCWR Pressure Vessel Internals 17
2.2.1.4 SCWR Power Conversion System 17
2.3 Materials Requirements for the LFR 18
2.3.1 LFR Component Description and Operation Conditions 19
2.4 Materials Requirements for the GFR 20
2.4.1 GFR Component Description and Operation Conditions 22
2.4.1.1 Operating Conditions for Nonmetallic Core Components and Reactor Internals . . 22
2.4.1.2 Operating Conditions for Metallic Core Components and Reactor Internals 23
2.4.1.3 Operating Conditions for Reactor Pressure Vessel 23
2.4.1.4 Operating Conditions for High Temperature Metallic Components. 25
2.4.1.5 Operating Conditions for Power Conversion Components. 25
2.4.1.6 General Materials Compatibility Considerations in GFR Environments 26
2.4.1.7 High-Temperature Design Methodology Considerations 27
2.5 Materials Requirements for Nuclear Hydrogen Generation Systems 28
2.5.1 Nuclear Hydrogen Generation System Descriptions 29
2.5.1.1 Thermochemical S-I Cycle 29
2.5.1.2 The Calcium-Bromine Cycle. 32
2.5.1.3 High-Temperature Electrolysis 34
3.0 Potential Candidate Materials Selections and Research Plans for Gen IV Reactors . .36
3.1 Potential Candidate Materials Selections and Research Plans for NGNP 36
3.1.1 General Considerations for NGNP Materials Research 37
3.1.1.1 Irradiation 37
3.1.1.2 High-Temperature Exposure 38
3.1.1.3 Helium Gas Cooled Reactor Environment 38
3.1.2 NGNP High-Temperature Metallic Components 40
3.1.2.1 Reactor Pressure Vessel System Materials Selection and Issues 40
3.1.2.2 Metallic Reactor Internals Material Selection and Issues 46
3.1.2.3 Intermediate Heat Exchanger Materials Selection and Issues 51
3.1.2.4 Recuperator, Piping, and Valve Materials Selection and Issues 52
3.1.2.5 Power Conversion System Materials Selection and Issues 54
3.1.2.6 High-Temperature Structural Design Technology. 57
3.1.3 NGNP High-Temperature Non-Metallic Components 74
3.1.3.1 Materials Selection and Issues for Reactor Core Graphite, Reflector, and Supports . 74
3.1.3.2 Ceramic Materials Selection and Issues for Thermal Insulation 81
3.1.3.3 Reactor Structural Composites Materials Selection and Issues 85
3.2 Potential Candidate Materials Selections and Research Plans for SCWR 92
3.2.1 General Considerations for SCWR Materials Research 93

Table of Contents (con't)

3.2.1.1 Water Chemistry and Corrosion Issues in SCWRs 93
3.2.2 Reactor Pressure Vessel Materials Selection and Issues 95
3.2.2.1 Expected Research, Testing, and Qualification Needs for SCWR RPV Materials . . 97
3.2.2.2 Experimental RPV R&D Plans 98
3.2.3 RPV Internals Materials Selection and Issues 99
3.2.3.1 Expected Research, Testing, and Qualification Needs for SCWR RPV Internals Materials 104
3.2.3.2 Experimental Reactor Internals Materials R&D Plans 107
3.2.4 Pump, Piping, and Valve Materials Selection and Issues 108
3.2.4.1 Expected Research, Testing, and Qualification Needs for Pump, Piping, and Value Materials 110
3.2.4.2 Experimental R&D Plans for Pump, Piping, and Valve Materials 110
3.2.5 Power Conversion System Materials Selection and Issues 111
3.2.5.1 Turbines 111
3.2.5.2 Condensers. 113
3.2.5.3 Expected Research, Testing, and Qualification Needs for PCS Materials 114
3.2.5.4 Experimental PCS Materials R&D Plans 115
3.3 Potential Candidate Materials Selections and Research Plans for LFR 116
3.3.1 General Considerations for LFR Materials Research 116
3.3.1.1 Materials Compatibility and Corrosion with Pb and Pb-Coolants in LFRs 117
3.3.2 Cladding Materials Selection and Issues 118
3.3.3 Core Internals Materials Selection and Issues 121
3.3.4 Reactor Vessel Materials Selection and Issues 122
3.3.5 Heat Exchangers Materials Selection and Issues 123
3.3.6 Balance-of-plant Materials Selection and Issues 123
3.3.7 Expected Research, Testing, and Qualification Needs for LFR Materials 123
3.4 Potential Candidate Materials Selections and Research Plans for GFR 126
3.4.1 Nonmetallic GFR Core and Reactor Internals Materials Section and Issues . . . 126
3.4.1.1 Expected Research, Testing, and Qualification Needs for Nonmetallic GFR Core and Reactor Internals Applications 129
3.4.1.2 Experimental Ceramics Core and Internals R&D Plans 130
3.4.2 Metallic GFR Core and Reactor Internals Materials Section and Issues 130
3.4.2.1 Expected Research, Testing, and Qualification Needs for Metallic GFR Core and Reactor Internals Applications 132
3.4.2.2 Experimental Metallic Core and Internals R&D Plans 133
3.4.3 RPV Materials Section and Issues 134
3.4.3.1 Expected Research, Testing, and Qualification Needs for GFR RPV 134
3.4.3.2 Experimental Reactor Pressure Vessel Materials R&D Plans 135
3.4.4 High Temperature Metallic Components Materials Selection and Issues 135
3.4.4.1 Expected Research, Testing, and Qualification Needs for High Temperature Metallic Components 137
3.4.4.2 Experimental High-Temperature Metallic Materials R&D Plans 137
3.4.5 Power Conversion Components Materials Selection and Issues 138
3.4.5.1 Expected Research, Testing, and Qualification Needs for Power Conversion Components 139
3.4.5.2 Experimental Conversion System Materials R&D Plans 139
3.4.6 Materials Compatibility Considerations to Establish Feasibility of GFR 140
3.4.6.1 Experimental Materials Compatibility R&D Plans 141
3.4.7 Required HTDM Experimental and Analytical Activities for GFR 142
3.4.7.1 Experimental HTDM R&D Plans 143
3.5 Potential Candidate Materials Sections and Research Plans for Nuclear Hydrogen Systems 143
3.5.1 Potential Candidate Materials and Research Needs for SI System Components . . 144
3.5.1.1 Operating Conditions and Candidate Materials for SI System Components . . . 144
3.5.1.2 Prioritized Research Needs for SI System Components 144

Table of Contents (con't)

3.5.2 Potential Candidate Materials and Research Needs for Ca-Br System Components . 148
3.5.2.1 Operating Conditions and Candidate Materials for Ca-Br System Components . . 148
3.5.2.2 Prioritized Materials Research Needs for Ca-Br System Components 150
3.5.3 Potential Candidate Materials and Research Needs for HTE System Components . 151
3.5.3.1 Operating Conditions and Candidate Materials for HTE System Components . . . 151
3.5.3.2 Prioritized Materials Research Needs for HTE System Components 153
3.5.4 Summary of High Priority Materials Research Areas for Nuclear Hydrogen Production 154
3.5.4.1 High-Priority Materials R&D for the SI System 155
3.5.4.2 High-Priority Materials R&D for the Ca-Br System 155
3.5.4.3 High-Priority Materials R&D for the HTE System 156
3.5.5 Schedule and Funding Requirements for Nuclear Hydrogen Production Materials . . 156
4.0 Crosscutting Materials Research Program 159
4.1 Qualification of Materials for Radiation Service 159
4.2 Qualification of Materials for High-Temperature Service 160
4.3 Microstructural Analysis and Model Development 162
4.3.1 Fundamental Materials Issues in the Fission Reactor Environment 163
4.4 Development of Improved High-Temperature Design Methodology 164
4.5 System-Specific Materials 166
4.6 National Materials Technology Program Integration 167
4.7 Experimental R&D Plans for Crosscutting Materials 168
5.0 Gen IV Materials Funding Requirements 174
5.1 Funding Requirements for the NGNP Materials Program 174
5.2 Funding Requirements for the SCWR Materials Program 175
5.3 Funding Requirements for the GFR materials Program 175
5.4 Funding Requirements for the Materials Crosscutting Program 176

Figures

Figure 1	Organization of U.S. Generation IV Reactor Program
Figure 2	GT-MHR Full Section
Figure 3	GT-MHR Reactor Vessel
Figure 4	GT-MHR Cross Vessel
Figure 5	GT-MHR Power Conversion Unit
Figure 6	GT-MHR Core Barrel
Figure 7	GT-MHR Core Internals
Figure 8	Representation of the current reactor pressure vessel design
Figure 9	Sketch of the reference SCWR core
Figure 10	The SCWR fuel assembly with metal water rod boxes
Figure 11	Generic LFR System Concept
Figure 12	The gas-cooled fast reactor concept
Figure 13	Main components of the gas-cooled fast reactor concept
Figure 14	The coupled chemical reactions of the SI cycle
Figure 15	Simplified diagram showing principle features of Ca-Br water-splitting cycle
Figure 16	Simplified diagram of a high-temperature electrolysis plant
Figure 17	Components of solid oxide cell used for high-temperature electrolysis
Figure 18	Response of a pipe subjected to repeated high-temperature thermal transient loadings
Figure 19	Estimated temperature range of candidate alloys based on mechanical properties and dimensional stability considerations only (no corrosion consideration).

Tables

Table 1	Potential structural composite applications
Table 2	Reference reactor pressure vessel design for the U.S. Generation-IV SCWR
Table 3	Reference fuel assembly design for the U.S. Generation-IV SCWR
Table 4	Reference fuel pin dimensions for the U.S. Generation-IV SCWR
Table 5	Small modular LFR design options and operating conditions
Table 6	Target design parameters for the GFR system
Table 7	Normal and off-normal conditions for GFR vessel, core, and internals
Table 8	Composition of helium environments (advanced HTGR) used in past tests
Table 9	Reactor pressure vessel system operating conditions affecting candidate material selection for the NGNP
Table 10	Conditions affecting materials selection for high-temperature metallic NGNP components
Table 11	Potential candidate materials selection for high-temperature metallic NGNP components
Table 12	Operating conditions affecting candidate material selection for NGNP higher temperature PCS components and potential candidate materials
Table 13	Current subsection NH materials and maximum allowable times and temperatures
Table 14	Candidate graphites for the core components of the NGNP
Table 15	Conditions affecting materials selection for reactor internals thermal insulation and potential candidate NGNP materials
Table 16	Conditions affecting materials selection for structural composites and potential candidate NGNP materials
Table 17	Relative Strengths of Ceramic Composite Materials for NGNP Applications
Table 18	HFIR irradiation matrix
Table 19	Typical primary water chemistry of supercritical fossil plants and LWRs
Table 20	Operating conditions and candidate materials for the in-core reactor components of the SCWR. All components listed are part of replaceable fuel assembly
Table 21	Operating conditions and candidate materials for the core structural support reactor components of the SCWR
Table 22	Summary of alloy candidates for steam turbines
Table 23	Summary of alloy candidates for condenser circuit
Table 24	Evolution of Ferritic/Martensitic Steels for Power-Generation Industry
Table 25	Candidate Alloys for LFR cladding
Table 26	Candidate Alloys for LFR core internals
Table 27	Maturity of ceramics for GFR applications
Table 28	Schedule and summary costs for GFR core and internals ceramics research
Table 29	Schedule for GFR metallic internals research
Table 30	Schedule for GFR RPV research
Table 31	Primary potential candidate materials for high-temperature metallic GFR components
Table 32	Secondary potential candidate materials for high-temperature metallic GFR components
Table 33	Testing temperature and environments for GFR potential candidate high-temperature alloys
Table 34	Schedule for GFR high-temperature metallic components research
Table 35	Power conversion system materials compatibility test matrix for alternate GFR designs
Table 36	Schedule for GFR power conversion materials research

Tables (con't)

Table 37 Environmental materials test matrix
Table 38 Schedule for GFR materials compatibility research
Table 39 Schedule for GFR high-temperature design methodology research
Table 40 Operating conditions and materials candidates for major sections of an SI nuclear hydrogen generation plant (a, b, and c)
Table 41 Operating conditions and materials candidates in a Ca-Br plant
Table 42 Operating conditions and materials candidates in a HTE plant
Table 43 Summary of high priority materials research issues for the NHI program
Table 44 Generation IV reactor concepts, coolant temperatures, and representative candidate structural materials

Acronyms

ADS	accelerator driven systems
AFCI	advanced fuel cycle initiative
AGCNR	advanced gas cooled nuclear reactor
AGR	advanced gas-cooled reactor
ASME	American Society for Mechanical Engineers
ASTM	American Society for Testing and Materials
ATR	advanced test reactor
AVT	all-volatile treatment
BWR	boiling water reactor
C/C	carbon/carbon
CEN	Comit Europen de Normalization
CERT	controlled extension rate tests
CRBRP	Clinch River Breeder Reactor Plant
CV	cross vessel
DOE	The Department of Energy
DOE-FE	DOE's Office of Fossil Energy
dpa	displacement per atom
ECP	electro chemical potential
FAC	flow-assisted corrosion
GFR	gas-cooled fast reactor
GIF	Generation IV International Forum
GT-MHR	gas turbine-modular high-temperature gas-cooled reactor
HFIR	High Flux Isotope Reactor
HHT	high-temperature helium turbine systems
HTDM	high-temperature design methodology
HTE	high-temperature electrolysis
HTGR	high temperature gas cooled reactor
HTTR	high temperature test reactor
HX	heat exchanger
IAEA	International Atomic Energy Agency
IASCC	irradiation-assisted stress corrosion cracking
IGCC	intergranular stress corrosion cracking
IGRDM	International Group on Radiation Damage Mechanisms
IHX	intermediate heat exchanger
INEEL	Idaho National Engineering & Environmental Laboratory
ISO	International Organization of Standardization
JAERI	Japan Atomic Energy Research Institute
LBE	lead-bismuth eutectic
LCP	lower core plate
LFR	lead-cooled fast reactor
LFR	lead fast reactor
LMFBR	liquid metal fast breeder reactor
LMR	liquid-metal reactor
LOFC	loss of flow condition
LWR	light water reactor
MSR	molten salt reactor
NDE	non-destructive evaluation
NGNP	Next Generation Nuclear Plant

Acronyms (con't)

NHI	nuclear hydrogen initiative
NPH	nuclear process heat
NRC	Nuclear Regulatory Commission
NTD	National Technical Director
OBES	Office of Basic Energy Science
ODS	oxide dispersion strengthened
OFES	Office of Fusion Energy Science
ORNL	Oak Ridge National Laboratory
OT	oxygenated treatment
PBMR	Pebble Bed Modular Reactor
PCS	power conversion system
PCV	power conversion vessel
PIE	post irradiation examination
PM	program manager
PNNL	Pacific Northwest National Laboratory
PNP	prototype nuclear process heat
PSA	pressure swing absorption
PWR	pressurized water reactor
QA	quality assurance
R&D	research and development
RPV	reactor pressure vessel
SCC	stress corrosion cracking
SCS	shutdown cooling system
SCW	super critical water
SCWR	supercritical water reactor
SFR	sodium-cooled fast reactor
SG-ETD	subgroup on elevated temperature design
SI	sulfur iodine
SiC/SiC	silicon-carbide/silicon-carbide
SIMs	system integration managers
SMT	simplified model test
SOFC	solid oxide fuel cells
UCS	upper core support plate
UGS	upper guide support plate
VHTR	very high temperature reactor

Acknowledgements

Many people have provided significant input for the preparation of this document. It is based, in large part, upon several basis documents, primarily including the materials assessments, surveys and program plans for the different reactor systems and the microstructural analysis and modeling and high-temperature structural design methodology crosscutting tasks. Text, tables, and figures from these documents have been incorporated into this report. The sheer number of contributors precludes their being listed as authors, notwithstanding their significant input. To at least ensure appropriate attribution, those contributing input from these and related sources are listed, with many thanks, below.

From Argonne National Laboratory
Douglas Crawford
Richard Doctor
Jian Gan
Steve Herring
Jim O'Brien
Mark Petri

From Gulf General Atomic
Gottfried Besenbruch
Lloyd Brown
Malcom LaBar
Russ Vollman
Bunsen Wong

From Idaho National Engineering and Environmental Laboratory
Robert Bratton
Jacapo Buongiorno
George O. Hayner
Paul A. Lessin
Thomas Lillo
Philip MaDonald
Ronald E. Mizia
Charles Park
Eric L. Shaber
Finis Southworth
Terry C. Totemeier
Kevan D. Weaver
W. E. Windes
R. N. Wright

From Los Alamos National Laboratory
Ning Li

From Oak Ridge National Laboratory
Timothy D. Burchell
James M. Corum
James W. Klett
Ronald L. Klueh
Louis K. Mansur

Randy K. Nanstad
Weiju Ren
Lance L. Snead
Roger E. Stoller
Philip L. Rittenhouse
Arthur K. Rowcliffe
Robert W. Swindeman
Peter F. Tortorelli
Dane F. Wilson
Ian G. Wright
Steven J. Zinkle

From Sandia National Laboratory
Fred Gelbard
Paul Pickard
Gary Polansky

From the University of California, Berkeley
Per Peterson

From the Massachusetts Institute of Technology
Ron Ballinger

From the University of Michigan
Gary S. Was

From the University of Nevada, Las Vegas
Tony Hechanova
Ajit Roy

From the University of Wisconsin
Todd R. Allen

The support and guidance provided in the past year as the Gen IV and NHI Materials Programs were being implemented by Rob Versluis, Sue Lesica, Trevor Cook, John Herczeg, and David Henderson at the DOE Office of Nuclear Engineering, Science, and Technology are also gratefully acknowledged.

Lastly, the professional and selfless help provided by Pamela Hadley at the Oak Ridge National Laboratory in compiling and polishing the manuscript for this report is very gratefully acknowledged.

1.0 INTRODUCTION

The Department of Energy's (DOE's) Generation IV Nuclear Energy Systems Program will address the research and development (R&D) necessary to support next-generation nuclear energy systems. Such R&D will be guided by the technology roadmap developed for the Generation IV International Forum (GIF) over two years with the participation of over 100 experts from the GIF countries. The roadmap evaluated over 100 future systems proposed by researchers around the world. The scope of the R&D described in the roadmap covers the six most promising Generation IV systems. The effort ended in December 2002 with the issue of the final Generation IV Technology Roadmap [1].

The six most promising systems identified for next generation nuclear energy are described within the roadmap. Two employ a thermal neutron spectrum with coolants and temperatures that enable hydrogen or electricity production with high efficiency (the Supercritical Water Reactor—SCWR and the Very High Temperature Reactor—VHTR). Three employ a fast neutron spectrum to enable more effective management of actinides through recycling of most components in the discharged fuel (the Gas-cooled Fast Reactor—GFR, the Lead-cooled Fast Reactor—LFR, and the Sodium-cooled Fast Reactor—SFR). The Molten Salt Reactor (MSR) employs a circulating liquid fuel mixture that offers considerable flexibility for recycling actinides, and may provide an alternative to accelerator-driven systems.

A few major technologies have been recognized by DOE as necessary to enable the deployment of the next generation of advanced nuclear reactors, including the development and qualification of the structural materials needed to ensure their safe and reliable operation. Accordingly, DOE has identified materials as one of the focus areas for Gen IV technology development. The high-level organization of the family of the DOE Gen IV and related programs, including the Advanced Fuel Recycle Initiative (AFCI) and the Nuclear Hydrogen Initiative (NHI), illustrating the interactive nature of the systems being evaluated and the major technology areas, is shown in Figure 1.

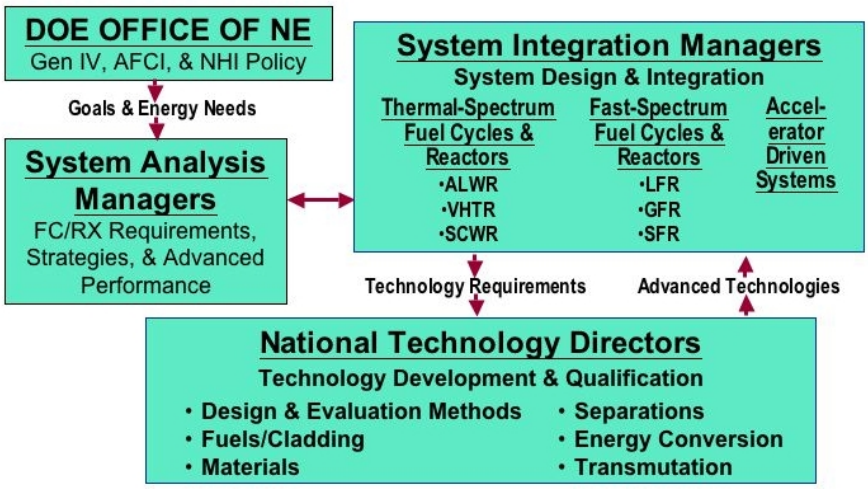

Fig. 1. Organization of the family of U.S. Generation IV Reactor Programs.

1.1 Integrated Materials R&D Program

An integrated R&D program is being conducted to study, quantify, and in some cases, develop materials with required properties for the reactor systems being developed as part DOE's Gen IV Program. The goal of the National Materials Technology Program is to ensure that the materials research and development needed to support Generation IV applications will comprise a comprehensive and integrated effort to identify and provide the materials data and its interpretation needed for the design and construction of the selected advanced reactor concepts.

For the range of service conditions expected in Generation IV systems, including possible accident scenarios, sufficient data must be developed to demonstrate that the candidate materials meet the following design objectives:

- acceptable dimensional stability including void swelling, thermal creep, irradiation creep, stress relaxation, and growth;
- acceptable strength, ductility, and toughness;
- acceptable resistance to creep rupture, fatigue cracking, creep-fatigue interactions, and helium embrittlement; and
- acceptable chemical compatibility and corrosion resistance (including stress corrosion cracking and irradiation-assisted stress corrosion cracking) in the presence of coolants and process fluids.

Additionally, it will be necessary to develop validated models of microstructure-property relationships to enable predictions of long-term materials behavior to be made with confidence and to develop the high-temperature materials design methodology needed for materials use, codification, and regulatory acceptance.

To make efficient use of program resources, the development of the required databases and methods for their application will incorporate both the extensive results from historic and ongoing programs in the United States and abroad that address related materials needs. These would include, but not be limited to, DOE, NRC, and industry programs on liquid-metal-, gas-, and light-water-cooled reactor, fossil-energy, and fusion materials research programs, as well as similar foreign efforts.

Since many of the materials challenges and potential solutions will be shared by more than one reactor concept, it is necessary to work closely with the system integration managers (SIMs) for the individual reactor concepts to examine the range of requirements for their major components to ascertain what the materials challenges and solutions to those will be for the widely varying materials needs within the Gen IV Program. There will be two primary categories for materials research needs:

- Materials needs that crosscut two or more specific reactor concepts and
- Materials needs specific to one reactor concept or energy conversion technology.

Where there are commonly identified materials needs for more than one concept, a crosscutting technology development activity is being established to address those issues. Where a specific reactor concept has unique materials challenges, those activities are being addressed in conjunction with that particular reactor concept's R&D. Examples of this category of materials needs include reactor-specific materials compatibility issues associated with a particular coolant and materials used within only one reactor concept, such as graphite within the VHTR (now called the Next Generation Nuclear Plant in the U.S. program). Also included in the reactor-

specific materials category are materials issues that might otherwise be considered crosscutting, except that the schedule requirements established by one reactor are much more pressing than schedules for the other reactors. A large portion of the materials R&D for the NGNP will fall into this category.

The National Materials Technology Program within the overall DOE Gen IV Program has responsibility for establishing, managing, and executing the integrated plan that addresses cross-cutting, reactor-specific, and energy-conversion materials research needs in a coordinated and prioritized manner. In so doing, it will be critical to work with the SIM for each of the Gen IV reactor concepts, the National Technical Directors (NTDs) for fuel and cladding and for energy conversion systems, and the Program Manager (PM) for NHI to gain a detailed understanding of their materials challenges as a basis for developing and executing the research needed to provide the information required to select and qualify the materials needed for their design process.

Four interrelated areas of materials R&D are generally considered crosscutting: (1) qualification of materials for service within the vessel and core of the reactors that must withstand radiation-induced challenges; (2) qualification of materials for service in the rest of plant that must withstand high-temperature challenges; (3) the development of validated models for predicting long-term, physically based microstructure-property relationships for the high-temperatures, extended-operation periods, and high irradiation doses that will exist in Gen IV reactors; and (4) the development of an updated high-temperature materials design methodology to provide a basis for design, use, and codification of materials under combined time-independent and time-dependent loadings. Materials research that has been identified for the individual reactor and energy-conversion concepts includes materials compatibility with a particular coolant or heat-transfer medium, as well as materials expected to used only within a single reactor or energy conversion system, such as graphite, selectively permeable membranes, catalysts, etc. and those materials needs that must be addressed in a time frame that significantly precedes those in the other reactor concepts.

While the current plan addresses materials issues for all the reactors currently being examined within the Gen IV program, the recognition that the VHTR Gen IV reactor concept will be built as a demonstration of the Next Generation Nuclear Plant (NGNP) by the end of the next decade will strongly drive much of the materials research during the next seven to ten years of the program.

References

[1] U.S. Department of Energy, "*A Technology Roadmap for Generation IV Nuclear Energy Systems*," Generation IV International Forum, GIF-002-00, December 2002

2.0 REACTOR CONCEPTS MATERIALS REQUIREMENTS

Currently, there are only four reactor concepts that are being actively addressed within DOE's Gen IV Program. They are the VHTR (henceforth called NGNP), SCWR, LFR, and GFR. At the present time, other GIF partners are addressing the remaining two Gen IV concepts, the SFR and MSR. Consequently, only needs for the four active reactor systems will be included explicitly within the DOE Gen IV National Materials Technology Program. Additionally, the materials needs for NHI will be included in the overall integrated program to provide close coordination with and minimize duplication of related reactor materials studies.

As a first step to address the crosscutting and reactor-specific materials needs for each active reactor concept, a survey of those needs is being conducted in close cooperation with each reactor SIM. Such surveys have been performed for all active reactor concepts as well as for the NHI nuclear hydrogen production systems.

For each system, the SIM (or NHI PM) and his staff developed as comprehensive a set of component descriptions and their operating conditions as the level of design maturity of their individual system concepts would allow. Based on these descriptions, a set of likely, and where possible, bounding materials requirements were developed. These requirements were then used to formulate a list of potential candidate materials that might have the required capabilities and an initial program plan was developed to screen and, where possible, qualify them for service. As the individual system materials-needs surveys become increasingly mature, their results are being combined to update the integrated materials R&D program described herein. This is an ongoing process and this document provides the first revision of the overall Gen IV Reactor Materials selections and research plans. Major changes to integrated materials plan since its first version was compiled include the addition of major sections on system descriptions and materials needs for GFR and NHI. Updates of plans for NGNP, SCWR, and GFR systems, as well as revisions of overall schedules and budgets beginning in FY05, are also included.

To provide a basis for the integrated materials R&D program that has been developed, a condensed set of system and component descriptions, along with resulting materials requirements, based on the individual system needs studies follows [1-4].

2.1 Materials Requirements for NGNP

The U.S. Department of Energy (DOE) has selected the Very High Temperature Reactor (VHTR) design for the Next Generation Nuclear Plant (NGNP) Project. The NGNP reference concept is a helium-cooled, graphite-moderated, thermal neutron spectrum reactor with an outlet temperature of 1000°C or higher. The reactor core was originally envisioned to be a prismatic graphite block type core. However, it is quite feasible to also consider a pebble bed type of gas-cooled reactor. The final selection of a reference core concept will be made during the first year of pre-conceptual design by the industrial consortium selected, under DOE's acquisition strategy announced in 2004, to execute the NGNP activities. The plant size, reactor thermal power, and core configuration will be designed to ensure passive decay heat removal without fuel damage or radioactive material releases during accidents. The initial fuel cycle will be a once-through use of very high burn-up, low-enriched uranium.

The goal of the Generation IV NGNP Program is deployment of a full-scale, NRC-licensed demonstration reactor, capable of producing electricity and low-cost hydrogen before 2020. The first four years of the project will complete the pre-conceptual and conceptual design of the NGNP, with final design being completed by about 2012. The preliminary design is expected to provide the final materials requirements for the NGNP. The reactor program will need qualified materials early in the final design process. Construction of long-lead items (e.g., pressure vessel) may need to begin by about 2012.

The basic technology for the NGNP has been established in former high-temperature gas-cooled reactor plants (e.g., DRAGON, Peach Bottom, etc.) Furthermore, the technologies for the NGNP are being advanced commercially and the Japanese High-Temperature Engineering Test Reactor (HTTR) and Chinese High-Temperature Reactor (HTR)-10 projects are demonstrating the feasibility of some of the planned NGNP components and materials. Therefore, the NGNP is focused on building a demonstration plant, rather than simply

confirming the basic feasibility of the concept. The plant is envisioned to demonstrate the following:

- The capability to Nuclear Regulatory Commission (NRC)-license the very high temperature, gas-cooled reactor technology
- The ability to produce electricity with high efficiency using the closed Brayton cycle
- The ability to manufacture hydrogen using the NGNP as a process heat source
- Validation of the acceptability of the materials of construction as a bridge to commercialization
- The ability to perform deep burn transmutation of actinides from spent nuclear fuel.

Demonstration of hydrogen production may use both electricity and process heat from the reactor. The Nuclear Hydrogen Initiative (NHI) is developing efficient hydrogen production technologies in parallel with the NGNP Reactor Project. Hydrogen system concepts being evaluated by NHI and their materials R&D issues are described in the appropriate sections of this report.

The operating conditions for the NGNP represent a major departure from existing water-cooled reactor technologies. Although a significant assortment of materials and alloys for high-temperature applications are in use in the petrochemical, metals processing, and aerospace industries, a very limited number of these materials have been tested or qualified for use in nuclear reactor-related systems. Today's high-temperature alloys and associated American Society of Mechanical Engineers (ASME) Codes for reactor applications reach about 800°C. Some primary system components for the NGNP will require use of materials at temperatures above 800°C. Such use will require further assessment of existing, well-characterized materials or selection of newer materials for which less data exists. Potential accident conditions with associated higher temperatures will dictate the use of carbon-based or ceramic materials within the reactor pressure vessel (RPV). The use of structural ceramics or composites in safety-related reactor components represents a completely new challenge to the nuclear industry.

A materials survey [2] was conducted in to identify material requirements for the NGNP including those that are beyond the limits of current materials technology. That initial survey indicated that the materials issues are solvable, but may be expensive to resolve.

The following assumptions are incorporated the NGNP materials plan and are used in estimating the scope, cost, and schedule for completing materials selection and qualification processes:

1. Although the reactor design has not been formally selected, for the purposes of this document it is assumed to be a helium-cooled, prismatic, graphite block core design fueled with TRISO design fuel particles in carbon-based compacts.
2. This very high temperature reactor must demonstrate the capability to NRC license the reactor technology. Therefore, the design and construction will need to meet appropriate Quality Assurance (QA) methods and criteria.
3. The demonstration is expected to be a full size (~600 MWt) reactor plant with a smaller size hydrogen demonstration unit.
4. The reactor coolant exit temperature from the core is expected to be 1000°C or greater unless such an outlet temperature is determined unfeasible.
5. The demonstration plant will be designed to operate for a nominal 60 years.

The DOE's strategy to maximize participation in the development of the NGNP program is to include the U.S. private sector and international sectors in the formation of an international consortium. A U.S. company would lead the consortium and execute the project activities. The DOE would evaluate the programmatic and technical merit of each phase of work. The U.S. Company would work with the Idaho National Laboratory to develop and manage research and development plans, including the materials qualification and selection project. The consortium would identify, evaluate, and recommend the technologies needed to meet the NGNP objectives. The consortium would be responsible for all design, licensing, construction and operational efforts for the project. Funding of the consortium will be performed through a cooperative agreement with the DOE. However a significant portion of DOE's share of the costs is expected to be directed to the NGNP R&D effort.

2.1.1 NGNP Component Description and Operation Conditions

2.1.1.1 NGNP Pressure Vessels

The three main vessels in the prismatic, gas turbine-modular high-temperature gas-cooled reactor (GT-MHR)-based NGNP design are the RPV, the cross vessel, and the power conversion vessel (PCV), (see Figure 2). These vessels represent the NGNP pressure boundary of the primary coolant.

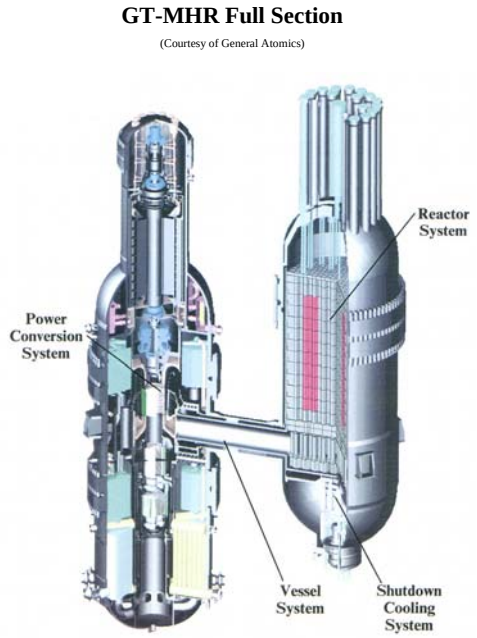

Fig. 2. GT-MHR Pressure Vessels System.

The diameter of the RPV will be less than 9 meters, with wall thicknesses between 100 mm and 300 mm. The height of the vessel is less than 24 meters. Nominal operating temperature of the RPV wall is about 400 - 490°C at a pressure of 7.4 to 8.0 MPa. The helium exits the reactor core at 1000°C. Figure 3 identifies the components of the RPV. The end-of-life fluence and dpa estimated for the RPV wall are 3.0E19 n/cm^2 (E>0.1 MeV) and 0.0075, respectively. During off-normal conditions, (e.g., pressurized conduction cooldown) the temperature of the helium coolant will increase. Idaho National Engineering and Environmental Laboratory (INEEL) has estimated this may result in the RPV mid-wall temperature reaching an upper limit of 610°C for up to 100 hours.

GT-MHR Reactor Vessel

(Courtesy of General Atomics)

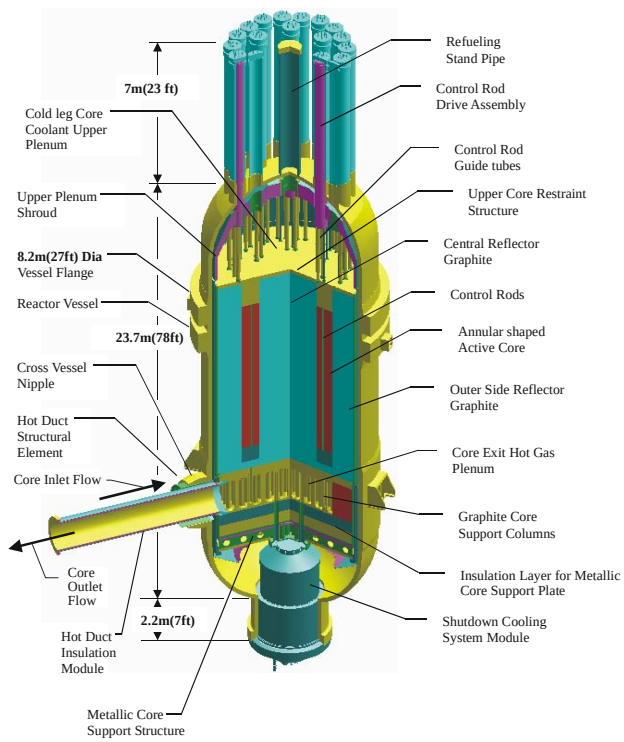

Fig . 3. Components of the GT-MHR Reactor Pressure Vessel.

The cross vessel is the pressure boundary for the exchange of helium between the RPV and PCV (see Figure 4). The outside diameter of the vessel is on the order of 2.5 meters with a thickness of less than 100 mm. The cross vessel is welded to the RPV and PCV. To accommodate thermal expansion during operation, the PCV is allowed to slide laterally away from the RPV. The 1000°C helium flows out of the reactor in a structural duct inside the cross vessel and returns from the PCV on the outside of a structural duct, designated the hot duct. The hot duct is insulated from the higher temperature helium by ceramic insulation on the inside surface of the duct. The return helium maintains the cross-vessel wall temperature at 600°C. The hot duct only sees the pressure differential of the core across its thickness, and protected by the insulation, only slightly higher temperatures than the cross vessel wall. The hot duct is

GT-MHR Cross Vessel

(Courtesy of General Atomics)

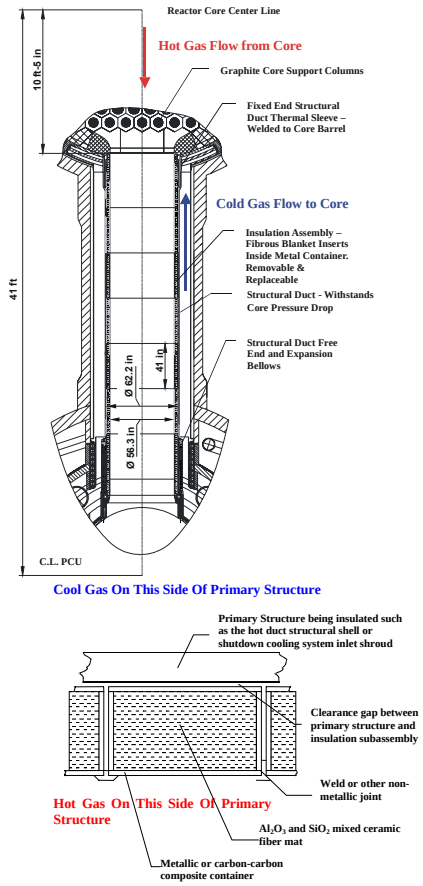

Fig. 4. GT-MHR Cross Vessel.

welded to the core barrel at the lower core plenum outlet and is connected to the PCV by means of a metallic bellows. The hot duct is seal welded to the metallic bellows. The bellows is mechanically connected to the turbine inlet shroud. The fluence and dpa experienced by the cross vessel and hot duct are the same as the RPV and core barrel where the attachment welds are made. The fluence and dpa in the remaining portion of the cross vessel gradually decrease to negligible values at the PCV.

The power conversion vessel, Figure 5, houses the main turbine, generator, and associated turbo machinery and heat exchangers. The vessel is on the order of 35 meters tall with outer diameters between 7 and 9 meters. The wall thickness is between 100 and 200 mm. The normal operating temperature for the vessel is 200°C with an off-normal temperature of 300°C and a design pressure between 5 and 6 MPa. The fluence and dpa seen by the PCV is negligible. The only two components that will see the 1000°C helium in the PCV are the metallic bellows and a small portion of the turbine inlet shroud.

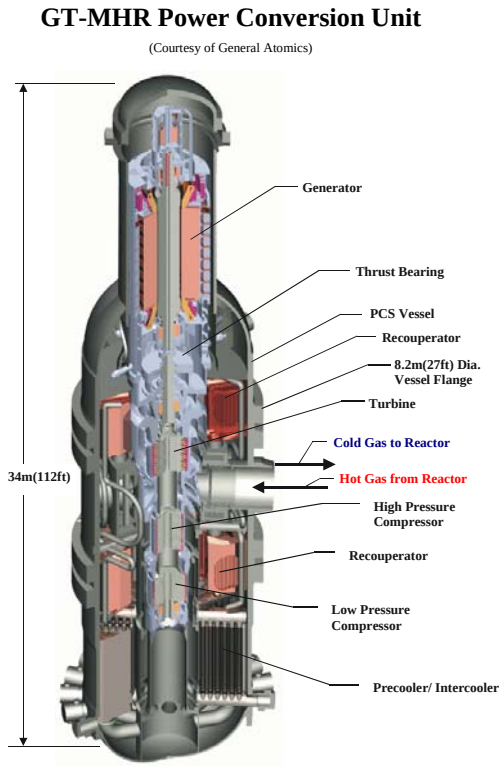

Fig. 5. GT-MHR Power Conversion Vessel.

2.1.1.2 NGNP Core Internals

The metallic core internals and graphite core components are shown in Figures 6 and 7. The neutron exposure for the metallic components and control rod drives is similar to that of the RPV. The fluence and dpa for the graphite components and control rods will be discussed individually, because of their proximity to the core.

NGNP Metallic Core Components

The core support floor is a structure of concentric rings welded together with radial beams originating from the center ring. The entire structure rests on supports forged into the lower head of the RPV. The floor supports the mass of the graphite core, core barrel, shroud, and upper core restraints. The structure is maintained at inlet helium temperatures and will experience negligible neutron exposure.

The core barrel is a metallic cylinder with a diameter of 6.8 to 7 meters, a height of ~14 meters and a thickness of 25 to 50 mm. The cylinder is welded to the core support floor. The core barrel physically restrains the graphite core during earthquakes and from radial thermal expansion during normal operations. The core barrel is centered and restrained in the RPV by keys that fit into corresponding keyways in the reactor pressure vessel. During operation, there is no space between the permanent graphite reflector and the core barrel; the permanent reflector blocks remain in contact with the core barrel. The normal operating temperature of the core barrel is

about ≈600°C. Temperature during off-normal conditions could reach as high as 1070°C for short periods.

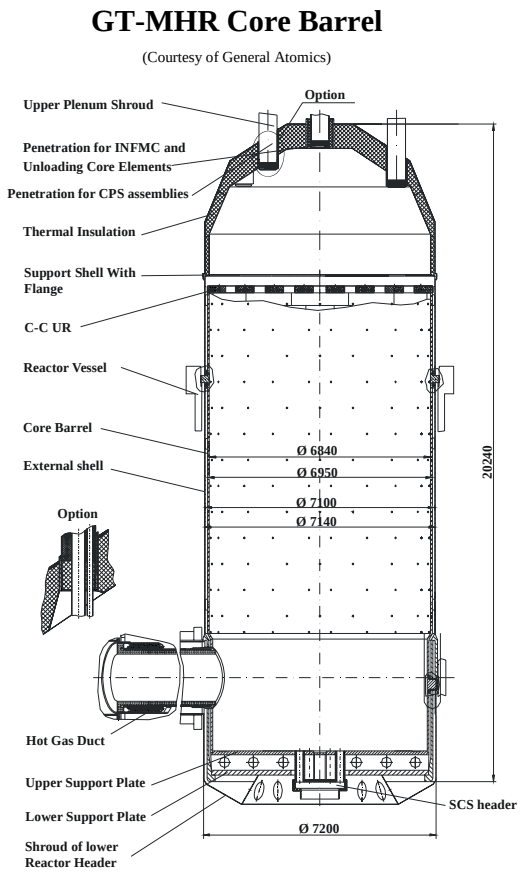

Fig. 6. GT-MHR Core Barrel

The shutdown cooling heat exchanger, is located in the bottom of the core and is used primarily for removal of heat during refueling. The system can be used for normal and off-normal heat removal during shutdown. The upper portion is a helical tube heat exchanger in an environment of inlet helium at 600°C mixed with 1000°C flow from the lower core plenum. The tubes are between 12 and 19mm thick. Water flows at rates necessary to keep the water subcooled and tube wall temperatures modest.

GT-MHR Core Internals

(Courtesy of General Atomics)

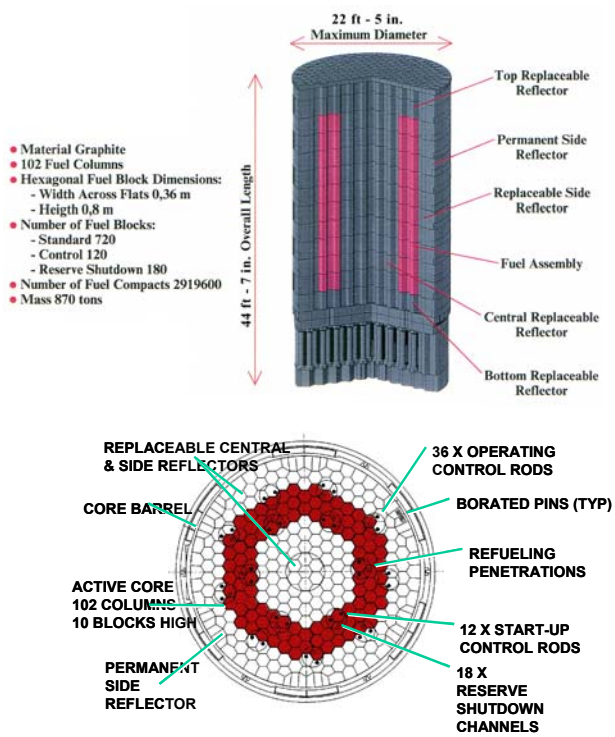

Fig. 7. GT-MHR Core Internals.

NGNP Nonmetallic Core Components

The upper plenum shroud sits on top of the core barrel and supports insulation on the inside surface. Inlet helium flows up the gap between the RPV and core barrel and through the slots in the shroud just above the joint with the core barrel and into the upper plenum cavity. The shroud forms an upper plenum cavity on top of the core and serves as a heat shield to the control rod and instrumentation drives during normal and off-normal operations. During normal conditions, the shroud is maintained at 600 to 650°C by the circulating inlet helium. Off-normal conditions could result in temperatures of ~1200°C in the upper shroud due to the flow reversal.

The upper core restraint is a structure made up of individual hexagonal boxes keyed its neighbors and top of the upper plenum blocks providing lateral support for each graphite column in the core. Normal operating temperature for these structures is 600°C, while off-normal temperatures could approach 1300°C.

The control rods are structural tubes containing B_4C. The rods transverse the upper plenum inside guide tubes from the upper inner head to just inside the core. The tubes are vented to the reactor pressure. The control rods will experience normal operating temperatures to 1050°C with off-normal temperatures reaching as high as 1500°C. These control rods will receive

fluences and dpas of 6.7E20 n/cm^2 and 0.56 per year, respectively, and likely require periodic change out unless fabricated from very highly radiation resistant materials.

The graphite core is a right circular cylinder composed of 102 columns each containing 10 blocks (Figure 6). The cylinder is arranged in eleven circular rings. The inner reflector uses the first five rings; the active core uses rings six, seven and eight; the outer reflector is composed of rings nine and ten; and ring eleven is the permanent outer reflector. On top of the core column is a reflector block then a half height upper plenum block that caps the column. Below the core column is a bottom reflector block then two half-height insulation graphite blocks. Under each column is a graphite pedestal. The pedestals rest on two additional insulation blocks (graphite or ceramic), which in turns sit on the core support floor.

The top and bottom insulator graphite blocks, upper plenum graphite blocks, and core pedestal supports see low to negligible neutron exposure. The normal operating temperature for the upper blocks is 700°C and 1050°C for the bottom blocks. The off-normal temperatures for the top blocks are 1200°C and 600°C for the bottom blocks, due to a flow reversal.

Replaceable outer and inner reflector graphite blocks are placed on the inside and outside of the core ring. The inner reflector sees the highest temperatures and fluences. Peak fluences range from 1.8 to 6.7E20 n/cm^2 (E > 0.1 MeV) and 0.16 to 0.56 dpa per year. Temperatures in the outer reflector blocks are 750°C for normal conditions and 1100°C for off-normal conditions. Peak temperatures in the inner blocks during normal operation conditions are 850°C and 1200°C during off-normal conditions.

The active core fuel blocks see the highest temperatures and fluences of all the graphite components at 9.9E20 n/cm^2 or dpa of 0.82 per year. Normal operating temperatures for the fuel blocks are approximately 1250°C, climbing to approximately 1500°C during off-normal conditions.

The potential applications for carbon and ceramic materials within the NGNP are summarized in Table 1.

2.1.1.3 NGNP Intermediate Heat Exchanger

A current NGNP requirement states that only 10% of the heat from the primary loop will be diverted to the production of hydrogen. The remaining 90% will be used to produce electricity. To accommodate this requirement, the intermediate heat exchanger (IHX) is employed to divert heat from the primary side of the reactor to the hydrogen production plant at prescribed conditions and isolate hydrogen production plant equipment from the radioactive contaminants in the helium coolant. To prevent primary radioactive contamination from entering the secondary side through leaks in the primary boundary, the secondary pressure will be higher than the primary pressure. The IHX can be employed in either a direct or indirect cycle application. Even though there is currently no preconceptual design for the IHX, this section has described some of the most challenging bounding conditions expected in the NGNP components to identify long-lead or long-term qualification or material acquisition issues.

Table 1. Potential Structural Composite Applications.

	Graphite	C/C	SiC/SiC	Insulating Material	Insulating Material
Hot Duct		X	X	X (castable oxide)	X (mat)
Core Support Pedestal	X				
Fuel Blocks	X				
Replaceable Outer/Inner Reflector Blocks	X				
Top/Bottom Insulation Blocks	X				
Upper Plenum Block	X				
Floor Block	X	X	X	X (monolithic oxide)	
Upper Core Restraint & Upper Plenum Shroud (Structural Liner & Insulation)		X	X	X	X
Control Rods and Guides		X	X		

For purposes of discussion, the IHX description herein assumes the helium will be the heat transfer medium in both primary and secondary circuits. If the secondary circuit heat transfer medium is something else, such as molten salt, relative pressure and materials compatibility issues will change accordingly.

Direct Cycle Application

The direct cycle application would require a compact heat exchanger sized for the 10% heat load be placed in the PCV. The turbine inlet shroud would have a small leg diverting primary coolant to the heat exchanger. The secondary side of the heat exchanger will contain coolant coming from another IHX inside the hydrogen production plant. The outlet of the primary side would re-enter the primary loop after the turbine or in one of the turbine stages.

The primary side of the IHX has 1000°C helium flowing through it with an exit temperature of 900°C or greater. The outlet of the secondary side of the IHX is 975°C with a secondary inlet side temperature of 500°C. The operating pressure in both legs is between 7.4 and 8.0 MPa with the secondary pressure exceeding the primary pressure by 0.1MPa to prevent radioactive leakage from the primary side. Depressurization of the secondary side while the primary remains hot and at pressure will create significant thermal stress within the secondary side of the IHX. Membrane stresses in the IHX may also be affected, but only as a function of the IHX design and the overall pressure differential. These stresses will potentially challenge the material properties at these temperatures. Three types of heat exchangers have been suggested for this IHX, the printed circuit heat exchanger, the brazed plate and fin type heat exchanger, and the refractory metal or ceramic open-cell heat foam heat exchanger. The printed circuit IHX relies on thermal diffusion welds between plates, while the brazed plate IHX uses high-temperature brazes to join the different plates together. Off-normal conditions would push the primary inlet temperature up to 1200°C for a short period.

Indirect Cycle
The indirect cycle application would require the IHX to be sized to handle the entire heat load of the reactor. The IHX is placed between the RPV and PCV with structural ducts between the RPV and IHX and between the IHX and PCV. The primary side of the IHX sees flow from the reactor and exits to its own turbo-machinery pumps, intercoolers, pre-coolers and recuperator for conditioning to reactor inlet conditions. The IHX secondary side outlet helium would run the main turbine/generator. This configuration would isolate both the hydrogen plant and the main turbine and generator from the radioactive contamination in the primary leg. The primary IHX inlet temperature is 1000°C and the secondary outlet temperature is 950°C. If the secondary side experiences a loss of flow without scram, the entire primary side heat load will be placed on the primary turbo-machinery and heat exchangers to reduce the temperature and bring the pressure back up to inlet conditions to maintain the downward flow through the core. Besides the heat exchangers discussed previously, more traditional, helically coiled tubes in a tube sheet design could be used as well. This IHX would also see the 1200°C spike in an off-normal condition.

2.2 Materials Requirements for the SCWR

The currently envisioned supercritical water reactor (SCWR) plant design will utilize a direct power generation cycle. High-pressure (25.0 MPa) coolant enters the vessel at 280°C. The inlet flow splits with about 70% of the inlet flow going down the space between the core barrel and the reactor pressure vessel (the down-comer) and about 30% of the inlet flow going to the plenum at the top of the rector pressure vessel to then flow downward through the core in special water rods to the inlet plenum. This strategy is employed to provide good moderation at the top of the core. The coolant is heated to about 500°C and delivered to a power conversion cycle which is similar to that used in supercritical fossil-fired plants: high- intermediate- and low-pressure turbines are employed with two re-heaters. The single most significant factor in changing the materials needs in going from the current pressurized- and boiling-water reactor designs to the SCWR is the associated increase in outlet coolant temperature from 300 to 500°C.

2.2.1 SCWR Component Description and Operation Conditions

2.2.1.1 SCWR Pressure Vessel

A schematic drawing of the current vessel design is shown in Figure 8, with key vessel dimensions are listed in Table 2. The vessel will be exposed to 280°C inlet coolant on the inside surfaces. The outlet nozzles will be protected with insulation and/or thermal sleeves against the full outlet temperature. However, they may operate at temperatures somewhat above 280°C. Peak fluence of the RPV is expected to be no more than 5×10^{19} n/cm^2 (E>0.1MeV).

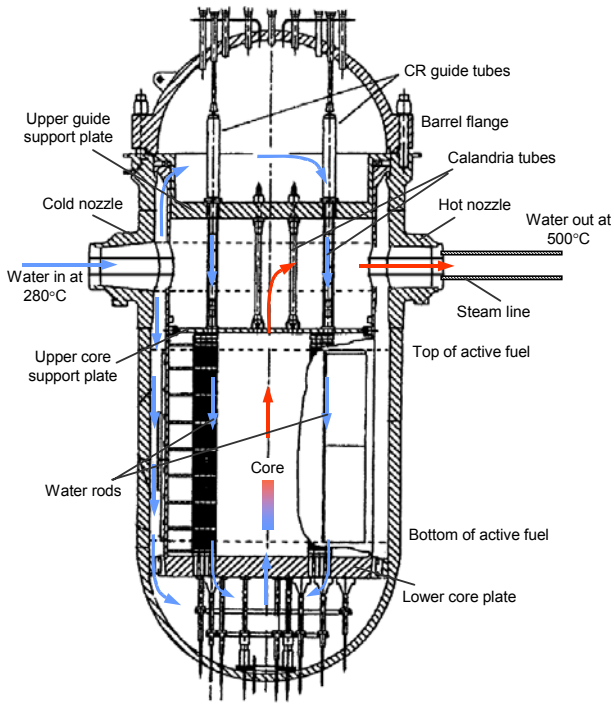

Fig. 8. Representation of the current reactor pressure vessel design.

Table 2. Reference reactor pressure vessel design for the U.S. Generation-IV SCWR.

Parameter	*Value*
Height	12.40 m
Design pressure	27.5 MPa (110% of nominal pressure)
Operating temperature	280 °C
Number of cold/hot nozzles	2/2
Inside diameter of shell	5.322 m (209.5 in.)
Thickness of shell	0.467 m (18.4 in)
Inside diameter of head	5.337 m (210 in)
Thickness of head	0.292 m (11.5 in)
Vessel weight	780 mt (1.7 million lbs)

2.2.1.2 SCWR Core and Fuel Assembly Design

The reference SCWR core design is shown in Figure 9. The core will have 145 assemblies with an equivalent diameter of about 3.9 meters. The core barrel will have inside and outside diameters of about 4.3 and 4.4 meters, respectively.

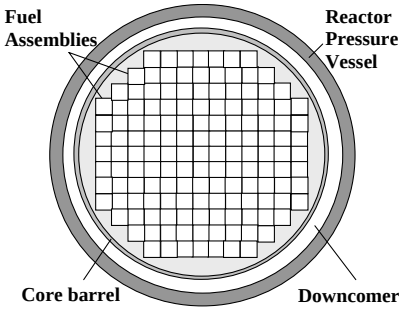

Fig. 9. Sketch of the reference SCWR core.

The reference SCWR fuel assembly design is shown in Figure 10 and the relevant dimensions are listed in Table 3. It may be necessary to insulate the water moderator boxes to retain a sufficient moderator density, as well as portions of the vessel internals supplying water to the core. The reference fuel pin dimensions are listed in Table 4.

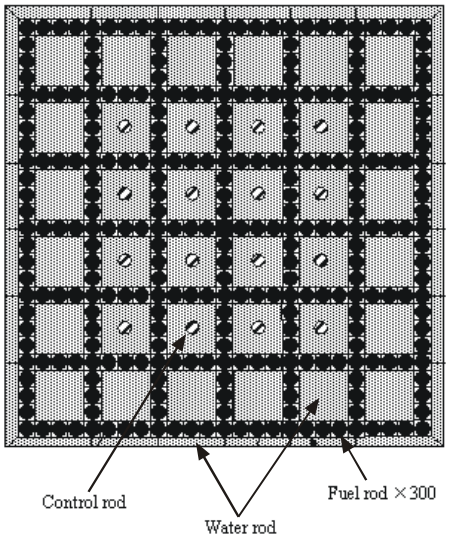

Fig. 10. The SCWR fuel assembly with metal water rod boxes.

Table 3. Reference fuel assembly design for the U.S. Generation-IV SCWR.

Parameter	Value
Fuel pin lattice	Square 25x25 array
Number of fuel pins per assembly	300
Number of water rods per assembly	36
Water rod side	33.6 mm
Water rod wall thickness	0.4 mm (plus insulation if needed)
Number of instrumentation rods per assembly	1
Number of control rod fingers per assembly	16
Active control rod materials	B_4C for scram, Ag-In-Cd for control
Number of spacer grids	14 (preliminary estimate)
Assembly wall thickness	3 mm (plus insulation if needed)
Assembly side	286 mm
Inter-assembly gap	2 mm
Assembly pitch	288 mm

With the exception of the plenum length and fill pressure, the fuel pin dimensions are typical of 17 by 17 PWR fuel assembly pins. However, the fuel pin pitch is considerably smaller than the pitch used in LWRs. The U-235 enrichment, the Gd_2O_3 loading and fuel burnup are typical of the values used in high burnup LWR fuel.

Table 4. Reference fuel pin dimensions for the U.S. Generation-IV SCWR.

Parameter	Value
Fuel pin outside diameter	10.2 mm
Fuel pin pitch	11.2 mm
Cladding thickness	0.63 mm
Heated length	4.27 m
Fission gas plenum length	0.6 m
Total fuel pin height	4.66 m
Fill gas pressure at room temperature	6.0 MPa

2.2.1.3 SCWR Pressure Vessel Internals

The important RPV internals include the lower core support plate, the core former, the core barrel, the upper core support plate, the calandria tubes located immediately above the upper core support plate, the upper guide support plate, the hot nozzle thermal sleeve or insulation, and the control rod guide tubes. The location and approximate shape of most of these components is shown in Figure 8.

Some of these components, including the lower core support plate and the control rod guide tubes in the upper head, will be subjected to normal pressurized water reactor (PWR) coolant temperature conditions and will be similar to the components typically used in PWRs. However, a number of the RPV internals, including the core barrel (or possibly the core former), the upper guide support plate, the calandria tubes, and the RPV hot nozzle sleeve, will be in contact with water at the inlet temperature at 280°C on one side and water at the hot outlet coolant at a temperature of 500°C on the other side

2.2.1.4 SCWR Power Conversion System

The reference SCWR system will have a power conversion cycle that is very similar to a supercritical coal-fired plant, with the boiler replaced by the nuclear reactor. The cycle is based on a large single-shaft turbine with one high-pressure/intermediate-pressure unit and three low-

pressure units operating at reduced speed (1800 rpm). The steam parameters at the high-pressure/ intermediate-pressure unit inlet are 494°C and 23.4 MPa, well within current capabilities of fossil plants. Similarly to traditional light water reactor (LWR) cycles, a moisture separator-reheater module is located between the high-pressure/intermediate-pressure and the low-pressure turbines, and reheating is achieved with live nuclear steam. Heat rejection occurs in traditional natural-draft cooling towers. Eight feedwater heaters raise the condensate temperature to the reactor inlet level of 280°C. The main feedwater pumps are turbine-driven and operate at about 190°C. There are two steam lines with outside diameters of 0.470 m (18.5 in.) and inside diameters of 0.368 (14.5 in.).

2.3 Materials Requirements for the LFR

LFR systems are Pb or Pb-Bi alloy-cooled reactors with a fast-neutron spectrum and closed fuel cycle. Options include a wide range of plant ratings, including a long-refueling-interval transportable reactor modules ranging from 10–100 MWe, multi-module systems from 300–500 MWe, and a large monolithic plant at 1200 MWe. These options also provide a range of energy products. The focus of the U.S. program is on transportable reactor module concepts that are small factory-built turnkey units operating on a closed fuel cycle with very long refueling interval (15 to 30 years) cassette core or replaceable reactor module.

With small systems, it is possible to design for either natural or forced circulation of the primary coolant. Several candidate energy conversion system configurations have been proposed including conventional steam cycle with steam generators either internal or external to the reactor vessel, and direct gas turbine cycles with either He or supercritical CO_2. A generic Gen-IV modular core, natural circulation, Brayton cycle system is shown in Figure 11.

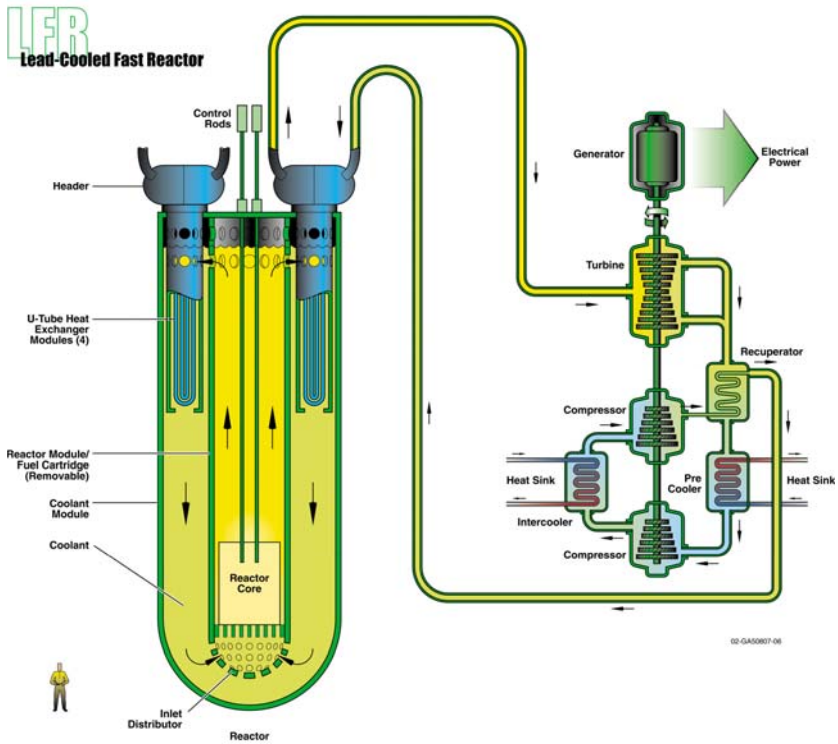

Fig. 11. Generic LFR System Concept.

Near-term systems are limited by material performance to outlet temperatures of about 550°C. Both Pb and Pb-Bi are coolant options for this reactor. Pb having potential for reduced corrosion, but limiting core ΔT, and Pb-Bi providing more temperature flexibility but raising issues of increased Po-210 and corrosion due to Bi. The favorable properties of Pb coolant and nitride fuel, combined with development of high temperature structural materials, may extend the reactor coolant outlet temperature into the 750–800ºC range in the long term, which is potentially suitable for hydrogen production and other process heat applications. In this option, the Bi-alloying agent in the coolant is eliminated. The required R&D is more extensive than that required for the 550ºC options because the higher reactor outlet temperature requires new structural materials, coolant technology and nitride fuel development.

Although the focus of the U.S program is on small transportable plants, in most cases the materials R&D for small designs is also applicable to larger plants. A summary of the design parameters for the smaller LFR systems is given in the Table 5.

Table 5. Small modular LFR design options and operating conditions.

	Pb-Bi cooled small systems, (near-term)	**Pb cooled small systems, (far-term)**
Coolant	Pb-Bi	Pb
Outlet Temperature (ºC)	~≤550	750–800
Pressure (Atmospheres)	1	1
Rating (MWe)	50–150	150-400
Fuel	Metal Alloy or Nitride	Nitride
Cladding	Ferritic Steel	Ceramic, coatings, or refractory alloys
Power conversion	Rankine or supercritical carbon dioxide Brayton cycle	Rankine or supercritical carbon dioxide Brayton cycle
Other energy products	Cu-I cycle for hydrogen	Ca-Br cycle for hydrogen

2.3.1 LFR Component Description and Operation Conditions

Temperatures that core structures are expected to see during normal operations range from 370-800°C between the lower and higher temperature systems being considered. but may increase to 650-900°C transient temperatures during accidental conditions. Neutron exposure within the core is expected to produce a maximum damage of core structures of up to 150 dpa. The RPV is expected to operate in a temperature range from about 370 - 420°C for the lower temperature Pb-Bi system up to about 600°C for the higher temperature Pb system.

At the current time, additional details regarding system and component design are being initiated. Updates of this document will provide better definition of specific component conditions and materials operating requirements as they become available.

2.4 MATERIALS REQUIREMENTS FOR GFR

The GFR system features a fast-spectrum, gas-cooled reactor (see Figure 12) and closed fuel cycle. The GFR reference design is a helium-cooled system operating at 7 MPa with an outlet temperature of 850°C that utilizes a direct Brayton cycle turbine for electricity production and provides process heat for thermochemical production of hydrogen. Through the combination of a fast-neutron spectrum and full recycle of actinides, GFRs will be able to minimize the production of long-lived radioactive waste isotopes and contribute to closing the overall nuclear fuel cycle.

Two alternate system options are currently being considered. The first alternate design is a helium-cooled system that utilizes an indirect Brayton cycle for power conversion. Its secondary system utilizes supercritical CO_2 (S-CO_2) at 550°C and 20 MPa. This allows for more modest outlet temperatures in the primary circuit (~ 600-650°C), reducing fuel, fuel matrix, and material requirements as compared to the direct cycle, while maintaining high thermal efficiency (~ 42%). The second alternate design is a S-CO_2 cooled (550°C outlet and 20 MPa), direct Brayton cycle system. This further reduces temperature in the primary circuit, while maintaining high thermal efficiency (~ 45%), potentially reducing both fuel and materials development costs as compared to the reference design, and reducing the overall capital costs due to the small size of the turbomachinery and other system components.

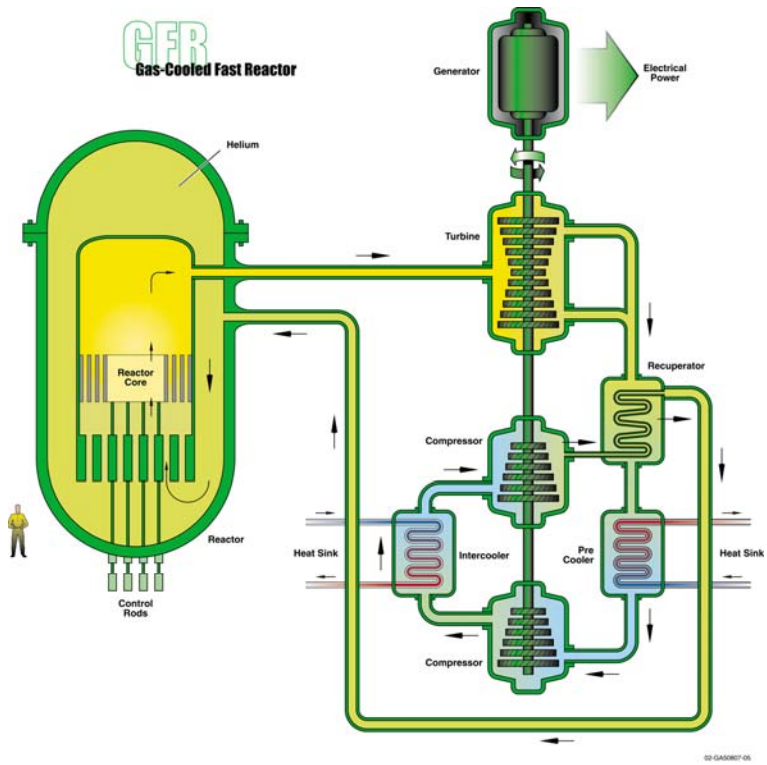

Fig. 12. The gas-cooled fast reactor concept.

Much of the GFR balance of plant will be able to utilize materials being evaluated or qualified for the NGNP, though a number of items specific to the operation of the GFR will need to be

evaluated. The largest materials challenge for the GFR, however, will be to select and qualify materials for the core and reactor internals structures, since graphite use will be severely restricted due to its heavy moderation of the neutron spectrum. Use of alternate, neutronically acceptable materials must be demonstrated at the high GFR temperatures and very high neutron exposures that are also compatible with the coolants envisioned.

Key in-core structures include: plate/block type composite fuels with casing/hexagonal canning and gas tubing, solid solution pellet fuel clad and wrapper, and particle basket designs. Materials must be qualified for the fuel and cladding as well as for supporting structures and subassembly structures for control rods and reflectors. The key out-of-core structures include the core barrel and hot gas duct, core support components, the reactor vessel and cross-vessel components. These components choices are highlighted in Figure 13.

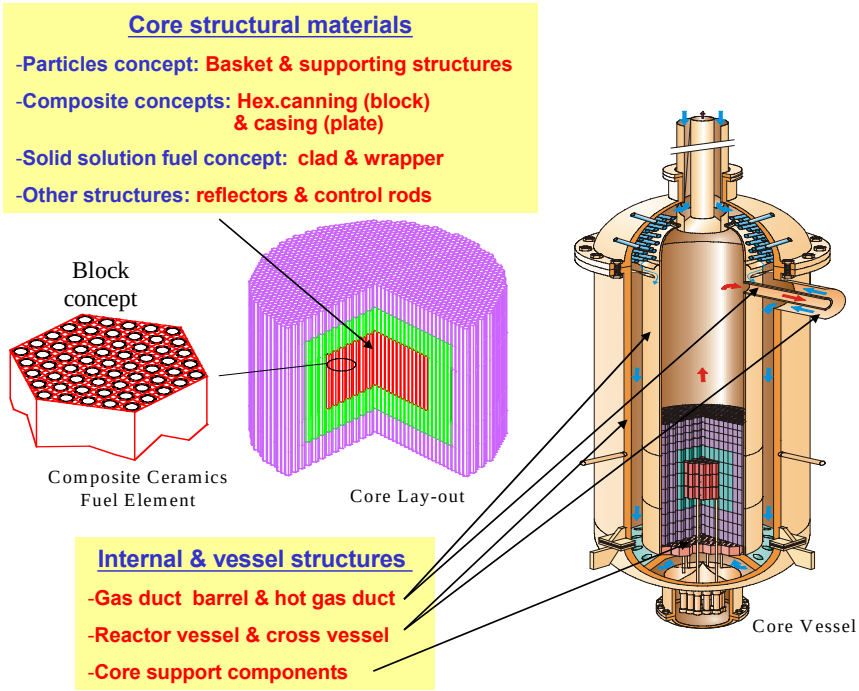

Fig. 13. Main components of the gas-cooled fast reactor concept.

More details on the GFR reactor designs and associated materials requirements are provided in a recent report by Kevan Weaver, et al. [5] A summary of target design parameters for the reference GFR system is given in Table 6. Alternate designs include the He-cooled, indirect S-CO_2 cycle and the indirect S-CO_2-cooled, direct cycle systems that were mentioned previously.

The goal of the current materials R&D plan being developed for the GFR is to examine those materials issues that are expected to potentially limit the viability of the overall system, such as neutronically acceptable core and reactor vessel internals materials. Since detailed component designs, particularly for the reactor core and internals, are unavailable at this early stage in the GFR system design, much of the materials research identified in this plan will focus on identification and viability of materials that meet the conditions that will likely envelop specific components. Where components designs are relatively more mature, such as for the reactor pressure vessel, more specific research tasks are identified.

Table 6. Target design parameters for the reference GFR system.

Reactor Parameters	Reference Value
Reactor power	600 Mwth
Net plant efficiency (direct cycle helium)	42%
Coolant inlet/outlet temperature and pressure/Helium flow rate	490°C/850°C at 7 MPa, 312.4 kg/s
Core structures temperatures (normal operations)	500-1200°C
Transient temperature in accident conditions	1600-1800°C
Out-of-core structures	440-850°C, low irradiation exposure, mechanical loading < 50-60 MPa and high useful life (400000 h)
Average power density	50-100 Mwth/m^3
Reference fuel compound	UPuC/SiC (50/50%) with about 20% Pu content
Volume fraction, Fuel/Gas/SiC	50/40/10%
Conversion ratio	Self-sufficient (BR~0)
Burnup, Damage (initial values)	5% FIMA; 80 dpa

Considering that many of the materials issues faced by the GFR, outside of the core region, are similar to those for the NGNP that is being developed on a significantly more rapid time scale than the GFR, it is being assumed that any relevant materials R&D performed for the NGNP will be available and hence will not be repeated within the GFR materials R&D plan. The resulting GFR materials scoping R&D plan contained herein is designed to provide the information needed on capabilities of current materials or those that can developed in time to allow a decision on the overall viability of the GFR system concept by 2010. Potential showstoppers will be identified and resolved. The information generated during this stage of the R&D is sufficient for the conceptual design of a prototype. It is not sufficient for the final design of the plant. The extended research required to provide the extensive data bases needed to qualify the candidate materials identified during the GFR materials scoping studies, detailed in this document, will be addressed at the conclusion of these studies and after the decision to proceed to the design phase has been made.

2.4.1 GFR Component Description and Operating Conditions

2.4.1.1 Operating Conditions for Nonmetallic Core Components and Reactor Internals

Ceramics are being considered for in-core application in the GFR primarily due to their retention of high-temperature properties. Components for which ceramics are the likely option include the reflector, control rod guides, and the upper and lower support plates. Estimates of the temperatures for the various components for each of the design types are provided Table 7, and range from as low as 300°C to as high as 1000°C. The temperatures listed could change based on the materials used, the effectiveness of the decay heat removal system, and the core design. For all cases, the expected neutron dose is quite high, exceeding 100 dpa. The wide range in service temperatures will require likely require the use of several different materials as the radiation resistance of ceramic and ceramic composite materials is strongly affected by temperature of service.

2.4.1.2 Operating Conditions for Metallic Core Components and Reactor Internals

The main core components and their estimated operating conditions are summarized in Table 7. Three different designs will need to be considered as described earlier: the reference design (He direct), alternate design 1 (He/CO2 indirect), and alternate design 2 (S-CO2 direct). Because the outlet temperatures vary by 300ºC, the structural materials in these three designs will experience substantially different temperatures. Therefore, the candidate materials for specific components in each design will differ in specific cases.

There are several distinct possibilities for the core design. These include the prismatic design where the core is constructed of blocks that incorporate the fuel. Other designs call for more or less conventional rods or plates that clad the fuel or for pebble bed arrangements contained within a core supporting basket-like structure. Control rods and associated sheaths or guides are additional in-core components that must be considered. The configurations of in-core structures will be quite different depending on the design chosen. However, all have in common the need to perform under approximately the same high fast neutron fluxes and high temperatures.

The main in-vessel structures outside the core region are the gas duct barrel, hot gas duct, grid plate, upper and lower core support components and thermal insulation. Again, three different designs will need to be considered as described above. Relative to the NGNP, some of the components in the GFR will experience higher temperatures, especially under off-normal conditions. The GFR core barrel, for example, is currently estimated to operate at temperatures up to 850°C, while that for the NGNP is 600°C. For off-normal conditions, the corresponding temperatures are 1200 and 1070°C, respectively. As shown in Table 7, the normal operating and off-normal temperatures decrease from the reference design to the He/S-CO2 indirect design and further decrease to the S-CO_2 direct design. The S-CO_2 design, however, presents a different set of compatibility issues with the use of supercritical CO_2 as the coolant. For the reference design and the He/S-CO2 design, the most significant demands placed on the reactor internals are the temperatures at which they will be required to operate and the radiation doses to which they will be exposed. For the S-CO_2 design, the radiation doses and exposure to the supercritical CO_2 are the most significant operational parameters.

2.4.1.3 Operating Conditions for Reactor Pressure Vessel

The reactor pressure vessel system envisioned for the GFR is similar in many respects to that of the NGNP. It will comprise a large RPV containing the core and internals, a second large vessel for power conversion containing the main turbine, generator, and associated turbo machinery and heat exchangers, and a pressure-containing cross vessel (CV) joining the RPV and the PCV. A summary of the anticipated operating conditions for the pressure vessel system is provided in Table 7. Reference [1] provides the relevant material needs for the NGNP pressure vessel. The NGNP materials report describes candidate pressure vessel material for lower (850°C outlet) and higher (1000°C outlet) gas-cooled systems. The outlet temperature envisioned for the GFR is 850°C. It is noted that the preliminary RPV size for the GFR indicates a smaller diameter and smaller height than that for the NGNP, while the thicknesses are also less, except in the case of the S-CO_2 design for which the RPV will need to be appreciably thicker than the NGNP vessel. The vessels will be exposed to air on the outside and either helium or supercritical CO_2 on the inside. The materials tentatively selected for gas-cooled RPV service are low-alloy ferritic/martensitic steels, alloyed primarily with chromium and molybdenum. The most significant demands placed on the RPV system are

Table 7. Normal and off-normal conditions for GFR vessel, core, and internals.

Component	Design Option	Normal Conditions		Off-Normal Conditions	Notes
		Temperature	Peak Dose	Temperature	
Fuel Matrix-Cladding	He direct	1200 □C	15-20 dpa/yr, total 60 dpa	Up to 1800 □C	
	He/S-CO_2 indirect	1000 □C		Up to 1600 □C	
	S-CO_2 direct	900 □C		1100 - 1500 □C	It may be possible to use metals in the core, depending on configuration.
Spacers/Wire Wrap	He direct	490-1000 □C	15-20 dpa/yr, total 60 dpa	Up to 1600 □C	
	He/S-CO_2 indirect	300-800 □C		Up to 1400 □C	
	S-CO_2 direct	400-700 □C		900 - 1300 □C	
Fuel Subassembly	He direct	490-1000 □C	15-20 dpa/yr, total 60 dpa	Up to 1600 □C	
	He/S-CO_2 indirect	300-800 □C		Up to 1400 □C	
	S-CO_2 direct	400-700 □C		900 - 1300 □C	
Fuel Subassembly Duct	He direct	490-1000 □C	15-20 dpa/yr, total 60 dpa	Up to 1600 □C	
	He/S-CO_2 indirect	300-800 □C		Up to 1400 □C	
	S-CO_2 direct	400-700 □C		900 - 1300 □C	
Reflector	He direct	490-850 □C	Up to 150 dpa	Up to 1100 □C	Normal operating temperatures are conservative; the high end may be less.
	He/S-CO_2 indirect	300-650 □C		Up to 900 □C	
	S-CO_2 direct	400-550 □C		Up to 800 □C	
Control Rod Guide	He direct	490-1000 □C	Up to 200 dpa	Up to 1600 □C	
	He/S-CO_2 indirect	300-800 □C		Up to 1400 □C	
	S-CO_2 direct	400-700 □C		900 - 1300 □C	
Upper Support Plate	He direct	850 □C	Up to 100 dpa	Up to 1200 □C	Normal operating temperatures assume the gas is well mixed at the core exit.
	He/S-CO_2 indirect	650 □C		Up to 1000 □C	
	S-CO_2 direct	550 □C		Up to 900 □C	
Lower Support Plate	He direct	490 □C	Up to 100 dpa	Up to 750 □C	
	He/S-CO_2 indirect	300 □C		Up to 550 □C	
	S-CO_2 direct	400 □C		Up to 600 □C	
Core Barrel	He direct	490-850 □C	80-100 dpa	Up to 1100 □C	
	He/S-CO_2 indirect	300-650 □C		Up to 900 □C	
	S-CO_2 direct	400-550 □C		Up to 800 □C	
Pressure Vessel	He direct	490-850 □C	< 1 dpa to 40 dpa	Up to 1100 □C	Dose is dependent on shielding used, and off-normal temperatures can be significantly reduced if insulation is used.
	He/S-CO_2 indirect	300-650 □C		Up to 900 □C	
	S-CO_2 direct	400-550 □C		Up to 800 □C	

the temperatures at which they will be required to operate. Although the currently envisaged operating and off-normal conditions are shown in the Table 7, there are uncertainties regarding the actual temperatures and times, loads, load-time history, time-temperature-load histories, and the temperature and neutron flux gradients through the RPV wall, especially for the S-CO_2 design. Moreover, there is no current estimate for fatigue cycles for the RPV system, although the estimate for the NGNP is for about 150 cycles plus hydrogen cycles for a total of about 600 small cycles. It is recognized that the normal operating temperatures for the RPV system are dependent on the capabilities of the materials of construction. Thus, an iterative approach will be required to eventually match the limiting material capabilities and the design operating conditions.

2.4.1.4 Operating Conditions for High Temperature Metallic Components

For selecting high-temperature metallic materials, considerations of the GFR operating conditions are focused on components that operate outside of the intense radiation field. Such components include piping and heat exchangers. Further, high-temperature materials for the power conversion components, such as the turbine, compressors, coolers, and recuperators, are discussed in the following section. In this sense, the operating conditions of the GFR high-temperature materials differ from the case of the NGNP, where internal metallic support components are subjected to much lower neutron fluences and are included in the category of high-temperature materials.

The anticipated temperatures in the three proposed GFR designs are all relatively lower than those of the NGNP. The reference He-cooled design operates with an outlet temperature of 850º at 7 MPa; the He-S/CO_2 indirect option has an outlet temperature of 600-650°C at 7 MPa with a 550°C secondary at 20 MPa; and the all-S/CO_2 will operate with an outlet temperature of 550°C at 20 MPa. The all-He direct design of NGNP performs with an outlet temperature of 1000ºC at 7.4 ~ 8 MPa. From an operating temperature point of view, the candidate high temperature metallic materials for NGNP can be directly considered for GFR applications.

As to environmental conditions, the “all-He direct” design option of GFR adds concerns for the effects of helium impurity contaminations that could be more severe than the NGNP, as discussed in sections on power conversion and general corrosion considerations. The other two design options, He-S/CO_2 indirect and all-S/CO_2, add significant compatibility challenges at the anticipated service temperatures.

2.4.1.5 Operating Conditions for Power Conversion Components

The GFR reference design power conversion system is very similar to that for the NGNP and essentially identical in terms of components, pressures, and temperatures to that for the GT-MHR. The temperature of the GT-MHR He coolant entering the turbine is ~850°C and the temperature at the recuperator inlet is nominally 500°C. Maximum temperatures in the high- and low-pressure compressors and the intercooler and precooler are very significantly lower (<150°C). The two alternate designs utilize supercritical CO_2 at 20 MPa in their power conversion systems. One design has He primary coolant at 600-650°C transferring heat through an IHX to secondary system supercritical CO_2; the CO_2 enters the power conversion turbine at 550°C (indirect Brayton cycle). The other alternate design utilizes a direct Brayton cycle for power conversion with the primary coolant supercritical CO_2 also entering the turbine at 550°C.

2.4.1.6 General Materials Compatibility Considerations in GFR Environments

The GFR reference design, like thermal-spectrum helium-cooled reactors such as the GT-MHR and the PBMR, uses a direct-cycle helium turbine for electricity generation and generate process heat for thermochemical production of hydrogen. This reference design shares many materials' requirements in common with the NGNP. However, the temperatures and composition of the environment are somewhat different. One alternate design also uses helium-cooled system with an indirect Brayton cycle for power conversion. The secondary system of this alternate design utilizes supercritical CO_2 at 550°C and 20 MPa. A second optional design is a supercritical CO_2 cooled (550°C outlet and 20 MPa), direct Brayton cycle system. From a corrosion viewpoint, the pressure vessel will operate in air and the internals of reactor will operate in either in helium or supercritical CO_2 environments.

For the helium-cooled reactor, it is expected that:

- Inlet/outlet temperatures will be 550/850°C;
- Surface temperatures of materials in the core in contact with the coolant during normal operation will be in the range of 800 to 1000°C; and
- Surface temperature of materials in the core in contact with the coolant under accident conditions will be in the range 1400 to 1600°C for approximately 6 hours (time required for the temperature to rise from normal operating to accident peak and return to near normal operating temperature).

For the supercritical CO_2-cooled reactor, it is expected that:

- Inlet/outlet temperatures will be 550/650°C;
- Surface temperatures of materials in the core in contact with the coolant during normal operation will be approximately 650°C; and
- Surface temperature of materials in the core in contact with the coolant under accident conditions will be approximately 1000°C for approximately 6 hours (time required for the temperature to rise from normal operating to accident peak and return to near normal operating temperature).

Helium Environment—The interactions between structural materials in controlled-impurity helium atmospheres associated gas cooled reactors have been the subject of numerous investigations [6]. The results of these studies conducted by various organizations in USA, Germany, England, Norway, Japan, and other places have demonstrated the importance of small changes in impurity levels, high temperatures and high gas flow rates. Metallic materials can be carburized or decarburized, and oxidized internally or at the surface. These corrosion reactions, depending on the rate, can affect long-term mechanical properties such as fracture toughness.

The simulated advanced HTGR helium chemistries used in various test programs are shown in Table 8. Because of the low partial pressures of the impurities, the oxidation/carburization potentials at the metallic surface of a gas mixture are established by the kinetics of the individual impurity catalyzed reactions at the surface. As shown, the main impurities are H_2, H_2O, CO and CH_4. The hot graphite core in an HTGR is assumed to react with all free O_2 and much of the CO_2 to form CO, and with H_2O to form CO and H_2. In addition, in cooler regions of the core, H_2 reacts with the graphite via radiolysis to produce CH_4. Because of the change in surface temperatures around the reactor, and associated changes in reaction mechanisms and rates of reaction on bare metal versus on scaled surfaces, reaction rates and order of reactions are important.

Table 8. Composition of helium environments (advanced HTGR) used in past tests.

Program	H_2 (μatm)	H_2O (μatm)	CO (μatm)	CO_2 (μatm)	CH_4 (μatm)	N_2 (μatm)	He (atm absolute)
NPH/HHT	500	1.5	40		50	5–10	2
PNP	500	1.5	15		20	<5	2
AGCNR	400	2	40	0.2	20	<20	2

NPH: Nuclear process heat
HHT: High temperature helium turbine systems
PNP: Prototype Nuclear Process Heat
AGCRNR: Advanced Gas Cooled Nuclear Reactor

Because of there being little or no graphite in the proposed GFR reactor, the composition of the helium environment may be somewhat different from those for which materials test data are available. Assuming zero graphite, the GFR environment should contain near zero levels of CH_4, less CO_2 and CO, about the same amount of nitrogen, and more moisture and oxygen than previous helium cooled reactors. However, the materials' surface temperatures are within the range of previous tests. Because it is possible to treat a side stream of the helium environment to reduce the oxygen and moisture, it is very likely that the GFR helium environment can be controlled to compositions very similar to that of previous reactors, if desired. As such, the materials' performance issues are mostly known.

The overall stability of the proposed helium environment must be evaluated in order to ensure that testing proposed in various sections of the program are performed in environments that have consistent chemical potentials. In addition, the corrosion of metals and nonmetals will be evaluated to establish baseline data where it does not exist. These tests will be performed at temperatures to include at least 50°C above the proposed operating temperature.

Supercritical CO_2 Environment—The chemical potential of the alternate supercritical CO_2 environment will, at least from a thermodynamic viewpoint, be oxidizing. It is also possible that under certain conditions, the environment may be carburizing. The long-term performance of materials under the oxidizing and/or carburizing conditions must be established for the supercritical CO_2 environment at temperatures relevant to the GFR, where little data currently exist. Corrosion of metals and nonmetals will be evaluated to establish baseline data. These tests will be performed at temperatures to include at least 50°C above the proposed operating temperature. In addition, the spalling, transport, and deposition of radiological corrosion products must be evaluated for the direct supercritical CO_2 Brayton cycle system.

2.4.1.7 High-Temperature Design Methodology Considerations

The impact and requirements of high temperature design methodology (HTDM) and possible codification needs will vary for each of the three proposed GFR designs. Earlier sections in this report adequately cover these conditions. HTDM and codification of materials and components that operate inside vs. outside the high radiation field will differ. Likewise, HTDM requirements for power conversion components will differ. Several materials may be used in more than one design, although use conditions may differ; consequently, the HTDM requirements may vary accordingly. Regardless, the basic framework for HTDM will be the same for all materials and designs. HTDM issues are considered for the power conversion, reactor core, reactor internals, pressure vessel, and piping and heat exchanger systems. Each is addressed separately as follows.

Power Conversion Components—ASME Section III codification is not believed to be required for GFR power conversion components. As in the NGNP qualification program, the materials R&D plan for delegated materials selection and qualification will be made by the turbine manufacturer; notwithstanding, the assessment of viability of preliminary candidate materials for use in supercritical CO_2 is included in the GFR plans as stated earlier.

Pressure Vessel, Piping, and Heat Exchanger—The GFR HTDM and codification requirements for pressure vessel, piping, and heat exchangers are covered by the NGNP plans. The nature of the GFR will result in significantly higher doses of radiation to core and reactor internals than the NGNP designs. Although the GFR pressure vessel will experience a higher dose level than the NGNP pressure vessel, the primary candidate pressure vessel materials response is reasonably well understood at the doses anticipated. Similarly, the operating conditions of piping and heat exchangers, where intense radiation exposure is not present, are within the envelope of the NGNP designs. No additional work will be required in this area to establish GFR viability unless alternate materials are required.

Core Components and Reactor Internals—Significantly higher doses of radiation to core and reactor internals will occur relative to NGNP components. This in itself, even in cases where the same materials as proposed for the NGNP designs will be used, requires substantial R&D to assess viability. Further, estimated normal and off-normal operating temperatures are much higher than in the NGNP designs. This is a significant challenge.

2.5 Materials Requirements for Nuclear Hydrogen Generation Systems

As part of the Gen IV Integrated Materials Plan, it is appropriate to consider the materials challenges associated with hydrogen generation systems and the anticipated R&D needed to meet those challenges. While the bulk of the materials R&D for hydrogen generation systems will be the responsibility of the Nuclear Hydrogen Initiative (NHI), it is valuable to include the work within the integrated materials R&D plan to minimize duplication and optimize synergistic interactions with the work being performed in support of the Gen IV reactor systems.

Currently, the Nuclear Hydrogen Initiative is investigating both high temperature electrolysis and thermochemical cycles as candidate technologies for the nuclear hydrogen production systems anticipated to be deployed in conjunction with Gen IV reactor concepts. The focus of thermochemical cycle R&D is on the sulfur based cycles – Sulfur-Iodine and Hybrid Sulfur, which involve temperatures in the range of 800 to 1000°C and corrosive environments. The Calcium-Bromine cycle is also being evaluated which involves lower peak temperatures (~760°C). High temperature electrolysis involves temperatures up to 1000°C in a steam environment. The multiple technologies provide methods of hydrogen production that could be coupled to the fairly wide range of operating conditions of the different Gen IV reactor concepts, while at the same time providing multiple, potentially redundant paths to minimize risk. Each technology has unique materials challenges that will need to be addressed to enable its successful deployment.

In the past year, an assessment of the proposed hydrogen production technologies and their associated materials requirements has been performed. It has been lead by the NHI program manager with strong support from the Gen IV materials NTD and staff. Extensive input has been obtained from commercial, academic, and national laboratory experts regarding both the anticipated configurations and operating conditions for each technology as well as the resulting materials challenges. In this first iteration of the materials R&D plans for NHI, only high-level materials needs and approaches to addressing them are provided, along with a general priority

for the work. The priorities are jointly derived from the criticality of the topic for establishing the viability of the process and early identification of candidate materials to meet that need.

In the sections that follow, descriptions of the three current leading candidate technologies for nuclear hydrogen production are provided along with the anticipated component operating conditions and the resulting prioritized materials R&D program required to support selection and deployment of the more promising systems.

2.5.1 NUCLEAR HYDROGEN GENERATION SYSTEM DESCRIPTIONS

The two leading candidate systems for production of nuclear hydrogen are the Sulfur Iodine (SI) thermochemical cycle and High Temperature Electrolysis (HTE). A second thermochemical cycle that operates efficiently at lower temperatures, the Calcium-Bromine (Ca-Br) cycle is also being evaluated.

2.5.1.1 THERMOCHEMICAL S-I CYCLE

The Sulfur Iodine (SI) water splitting cycle for hydrogen production consists of three coupled chemical reactions as shown in Figure 14. First, sulfuric acid and hydrogen iodide are generated in the central low temperature reaction, a.k.a. the Bunsen reaction. The reaction products, sulfuric acid and hydrogen iodide are then decomposed at high and intermediate temperatures respectively in the other two reactions. There are significant chemical separations associated with each chemical reaction. Water is the primary solvent in the system with iodine being an important solvent in the Bunsen reaction. Since the reactants in the SI cycle are recycled through the multiple sections, the only significant inputs to the system are high-temperature process heat and water and the only outputs are hydrogen and oxygen.

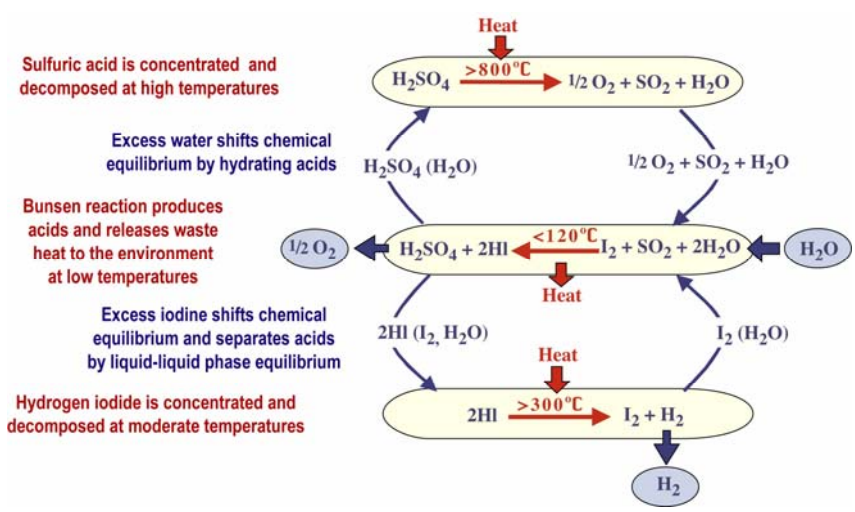

Fig. 14. The Coupled Chemical Reactions of the SI Cycle.

The baseline design for the current SI work has been recently described [8]. The overall SI cycle can be divided into three sections:

- *Section 1 – Sulfuric Acid and Hydriodic Acid Generation*
  This Section receives the decomposed sulfuric acid from Section 2 and iodine

from Section 3 and uses the Bunsen reaction to produce hydrogen iodide for Section 3. The dilute sulfuric acid is returned to Section 2.

- *Section 2 – Sulfuric Acid Concentration and Decomposition*
  This Section concentrates the sulfuric acid received from Section 1, and then decomposes it into sulfur dioxide, oxygen and water. The decomposed products are returned to Section 1.
- *Section 3 – Hydrogen Iodide Decomposition*
  This Section receives hydrogen iodide from Section 1 and decomposes it to produce hydrogen and iodine. The iodine and un-reacted hydrogen iodide is streamed back into to Section 1.

The three sections include extremely corrosive working environments over a wide range of temperatures and pressures. In order to realize a stable, safe and functional hydrogen production plant, careful selection and qualification of materials used to manufacture the reaction chambers, heat exchanges and other components for each section must be made.

Multiple approaches for generation of hydrogen that utilize sulfuric acid concentration and decomposition as the high-temperature step have been examined. These include the reference case described herein, in which HI decomposition is accomplished without first extracting the HI from HIx and an alternate case where phosphoric acid is used to separate the iodine from HIx, thus allowing the HI to be isolated for decomposition. Additional approaches include following the sulfuric acid decomposition with high temperature electrolysis in a hybrid process. At this point in time, materials needs are considered for the reference case and, to a lesser degree, for the phosphoric acid process. An overview of the SI reference case processing sections is provided below.

Section 1 – Sulfuric Acid and Hydriodic Acid Generation

The bulk of the Bunsen reaction: $I_2 + SO_2 + 2H_2O \rightarrow H_2SO_4 + 2HI$ is currently designed to occur in a heat exchange reactor at elevated pressure. These reaction species also occur in primary and secondary oxygen scrubbers and an H_2SO_4 boost reactor.

The output from the main heat exchange reactor consists of three phases that are separated and then processed separately. The gas phase consists of residual SO_2 in O_2 and this SO_2 is removed by the O_2 scrubbers. The majority of O_2 is vented to atmosphere but a portion is recycled and is used to strip any SO_2 remaining in the dense HIx liquid. The processed HIx liquid is sent to Section 3 for decomposition. The stripped SO_2 is used to react with the water in the light-liquid phase in the H_2SO_4 boost reactor. The iodine stream exiting from the boost reactor bottom contains the HI formed in the boost reactor along with the water required to solubilize the HI. This stream is pumped to the heat exchanger. The overhead liquid product of the boost reactor is passed on to Section 2, where the H_2SO_4 is concentrated and decomposed.

Any SO_2 remaining in the sulfuric acid is recycled to the beginning of Section 1, along with water flashed from the sulfuric acid. The gaseous product of the boost reactor is scrubbed in the secondary scrubber, along with the exhaust from the SO_2 absorber. The gaseous product of the O_2 scrubbers is vented and contains one-half mole of oxygen for every mole of hydrogen produced in the overall process. In a mature hydrogen economy, the oxygen will likely be vented to the atmosphere but for initial plants, the oxygen co-product may be collected for sale. The liquid products of the two oxygen scrubbers are combined with a portion of the HI/H_2O recycled from Section 3. This combined stream is used to adsorb much of the SO_2 stripped from the HIx.

Section 2 – Sulfuric Acid Concentration and Decomposition

The high-temperature section of the SI cycle can be described in two parts: concentration and decomposition of sulfuric acid.

Concentration

The incoming sulfuric acid from Section 1, along with the internally recycled sulfuric acid, is concentrated to about 40 mole% in a high-pressure four-stage isobaric concentrator. The feed to Section 2 and the recycle stream are first pumped up to the operating pressure of the isobaric concentrator at 35 atm and are then preheated together before entering the concentrator. As the sulfuric acid solution flows through multiple serially connected and heated chambers within the concentrator, water is boiled off within each chamber resulting in an increase in the temperature and the acid concentration of the solution. Upon completion, the concentrator produces a liquid phase of concentrated sulfuric acid and a vapor phase of steam. The small amount of sulfur dioxide that remains in the inlet sulfuric acid is removed with the water. The water vapor boiled off from each chamber is mixed above the chambers and leaves as a single stream. The sensible and latent heat in this stream can be re-used elsewhere in this section. The mixed vapor outlet is condensed and its sensible and latent heats are recovered via a re-boiler in the vacuum distillation column.

The liquid product of the isobaric concentrator is further concentrated in a series of three reduced pressure flashes at nominal pressures of 8 bar, 2 bar and 50 torr before entering a vacuum still. Prior to the first flash, some heat is removed for use later in the process but the subsequent flashes are adiabatic. The vapor from the final adiabatic flash passes through a partial condenser. The condensed liquid from the partial condenser is fed to the vacuum still at a position appropriate to its composition.

The overhead from the still, which is nearly pure water, is returned to Section 1. The bottom product of the distillation column is azeotropic sulfuric acid (~90 mole % H_2SO_4) liquid at 212°C. The concentrated sulfuric acid is pressurized and then decomposed.

Decomposition

Before the sulfuric acid can be decomposed, it must first be heated and vaporized. Some of the heat required to preheat the stream prior to vaporization is recovered from the liquid product of the isobaric concentrator but the remainder of the heat required for heating, vaporizing, and decomposing the sulfuric acid is provided by high-temperature process heat from the associated nuclear reactor. Some of the sulfuric acid decomposes into SO_3 and water as it is vaporized and this reaction proceeds further as the vaporized stream is heated in the recuperator.

The recuperator retrieves much of the heat that remains after sulfuric acid decomposition. Physically, the recuperator is envisioned to be similar to a shell and tube heat exchanger, with the hot fluid flows on the tube side and the cool fluid flows on the shell side. Most of the sulfuric acid will decompose into SO_3 and water before exiting the recuperator. The SO_3 is then catalytically decomposed into SO_2 and O_2. A four-stage decomposer/reactor has been tentatively selected to improve process efficiency. As the number of stages is increased, more of the heat can be supplied to the reactor at lower temperatures.

The reactor outlet stream is cooled in the recuperator, transferring heat to its feed, as mentioned previously. The unreacted SO_3 combines with water reforming H_2SO_4. The reaction products are further cooled and the heat is recovered for use within this section in the product cooler. The product cooler is physically divided into three heat exchangers. Part of the recovered heat is

used for the first stage of the isobaric concentrator and the remainder is used to preheat the concentrator feed. Unrecoverable heat is lost to the cooling water. The liquid condensed in the product cooler is recycled to the isobaric concentrator and the gas phase, consisting primarily of SO_2 and O_2 is recycled to Section 1. The entire sulfuric decomposition reaction occurs at elevated pressure (≈7 bar).

Section 3 – Hydrogen Iodide Decomposition

The HIx (HI + I_2 +H_2O) product from Section 1 is further pressurized and then recuperatively heated to the feed temperature of the reactive distillation column in a network of heat exchangers. This heat is recovered from the two liquid products of the distillation column: the bottom stream contains most of the iodine, and the side outlet is made up from mostly water and hydrogen iodide.

The overhead, hydrogen-rich product of the column is scrubbed in a packed column with water to remove the residual hydrogen iodide from the hydrogen. The high pressure and low temperature of the scrubber result in a relatively low water content (0.14 mole %) in the resulting hydrogen product.

2.5.1.2 The Calcium-Bromine Cycle

The reference calcium-bromine (Ca-Br) cycle for hydrogen production is a variant of the UT-3 thermo-chemical cycle investigated by the Japan Atomic Energy Research Institute (JAERI). The Ca-Br cycle is designed to operate at lower temperatures than the SI system and utilizes regenerative solid-to-gas reactions in multiple, rotating beds to produce HBr that is then further split to obtain hydrogen. A simplified diagram for a commercial-scale Ca-Br cycle is provided in Figure 15. As with the SI cycle where the reactants are recycled through the processing sections, the only significant inputs to the Ca-Br system are high-temperature process heat and water and the only outputs are hydrogen and oxygen.

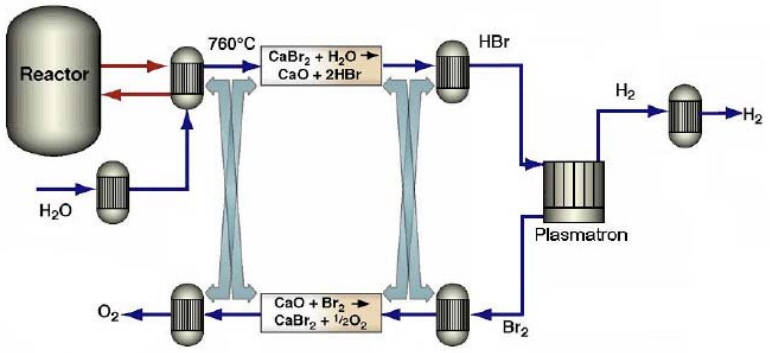

Fig. 15. Simplified diagram showing principle features of Ca-Br water-splitting cycle.

To dissociate the HBr to H_2 and Br_2, a "plasmatron" system is envisioned. As the name suggests, this system employs plasma-chemical reactions and operates at low temperatures and pressures to produce H_2 in a mix of HBr. Following plasma-chemical reactions, the original $CaBr_2$ reagent is regenerated during the production of oxygen. Heat is recovered from the oxygen production stage to produce electricity. A staged, plug-flow operation is employed to minimize the loss of Br_2 from the process. The use of gas-solid reactions for the two stages in the proposed process will simplify separations compared with cycles based on gas/gas separations. As long as operations remain in the specified temperature ranges, byproducts such

as bromine oxides (Br_2O; BrO_2), hydrobromous acids (HBrO), and calcium hydroxide $Ca(OH)_2$ should not form. Major portions of the system are described below:

Water Splitting with HBr Formation
Steam is reacted with $CaBr_2$ to crack the water and form two moles of HBr for every mole of water. Water splitting with HBr formation takes place at a temperature of about 760°C in a solid-gas reaction where

$$CaBr_2 + H_2O \rightarrow CaO + 2HBr \text{ [Equation 1]}$$

What is not shown in this equation is that the calcium is supported on 75 wt% $CaTiO_3$ that cycles between $CaBr_2$ and CaO. This stage is carried out in four plug-flow operations, and a low-moisture HBr product is generated during H_2 production. A countercurrent flow employing four beds is envisioned. Consequently, the reaction progressively demands more cycle heat as it moves through the beds that contain higher and higher concentrations of $CaBr_2$. The first bed contacted is low in $CaBr_2$, while the last is nearly pure $CaBr_2$. This endothermic reaction requires heat input directly into each of the plug flow reactor beds. As the reactants in the final bed are consumed, the bed is removed from HBr production and a new bed rotated into service. The beds removed from the forward HBr production process are then cycled through the oxygen recovery process described next, where their $CaBr_2$ reactant content is regenerated.

Oxygen Recovery
Oxygen recovery and the regeneration of the initial $CaBr_2$ reagent is an exothermic process at 577°C, again in a solid-gas reaction where

$$CaO + Br_2 \rightarrow CaBr_2 + 0.5O_2 \text{ [Equation 2]}$$

This regeneration stage of the sold beds uses the Br_2 reactant stream discharged from the plasmatron. As a consequence of this sequential system of reactions, there is an inherent difficulty. This difficulty is linked to the significant physical change in dimensions as the calcium cycles between bromide and oxide. The CaO has a cubic structure that must undergo a significant dimensional change to accommodate the $CaBr_2$ orthorhombic structure. This process must then be reversed. As the calcium reactant undergoes this change in dimensions, sintering will likely occur unless the calcium is carefully dispersed on a suitable support and plugging of pore volumes is possible. Suitable support structures for the calcium that will tolerate this reversible cycling of plug-flow operation for $CaBr_2$ regeneration with the liberation of oxygen must be developed.

The oxygen recovery step rejects significant heat. Possible uses of this heat include recovery within recuperators of the hydrogen production plant, desalination, or even use in a Brayton cycle to produce electric power.

Hydrogen from HBr Dissociation
The current reference design includes a single-stage HBr-dissociation step. This represents a modified UT-3 cycle in which hydrogen formation will involve either HBr electrolysis or the use of a plasma chemistry technique operating near ambient conditions. Decomposition of HBr to H_2 and Br_2 using plasma-chemistry dissociation operates at modest process conditions (~100°C) in a gas phase reaction where

$$2HBr + \text{plasma} \rightarrow H_2 + Br_2 \text{ [Equation 3]}$$

The products of decomposition — H_2 and Br_2 — are in different states at standard conditions, H_2 is a gas and Br_2 is a liquid. Additionally, the main gases involved in the process (H_2, HBr, and Br_2) have very different physical properties. Because of these differences, the direct separation of components can be expected, if a plasma chemical reactor is employed. To accomplish the separation, the HBr gas with recycle is introduced into the plasma cavity using a rotational flow pattern at near-sonic speeds, creating a centrifugal separation of hydrogen products from the bromine at the periphery of the rotating flow.

This process operates at low temperatures and low pressures, making the recovery of the H_2 straightforward using conventional technology. A disadvantage of this low-pressure approach is that five stages of compression (with the attendant capital and operating penalties) are required to bring the H_2 to purification and pipeline operating conditions. Following compression, the small residual fraction of water and bromine carried over in the vapor phase are removed. HBr is recovered for recycle using pressure swing absorption (PSA), a standard H_2 purification technique. PSA yields a product suitable for delivery to the H_2 pipeline, completing the process.

2.5.1.3 High-Temperature Electrolysis

High-Temperature Electrolysis uses the technology of solid-oxide fuel cells (SOFCs) to split steam into hydrogen and oxygen. The cells operate at 750 to 900°C and have the electrical potential reversed from that of a typical fuel-cell mode. A schematic diagram of an HTE plant is shown in Figure 16 and a cross-section of an individual cell is shown in Figure 17. Nuclear hydrogen production using HTE utilizes the energy input from nuclear-reactor process heat to reduce the electrical power required to split water into hydrogen by electrolysis, thereby improving the overall efficiency of the process.

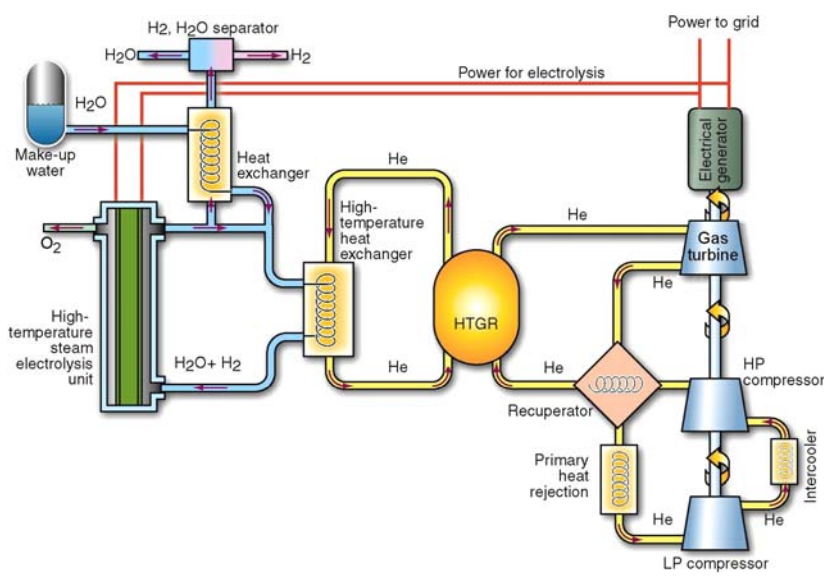

Fig. 16. Simplified diagram of a high-temperature electrolysis plant.

High-temperature electrolysis builds on the technology of SOFCs, using similar materials, but producing hydrogen and oxygen rather than electricity. DOE's Office of Fossil Energy (DOE-FE) and commercial interests have had very significant programs for the last two decades to develop SOFCs, particularly for the very severe conditions associated with coal gasification. In

comparison, the service conditions for a solid oxide electrolytic cell are generally more benign, operating at lower temperatures (750 to 900°C) with the inlet and outlet gases at the cathode consisting of only steam, hydrogen, and oxygen in differing concentrations. The anode of the electrolytic cell is only region where conditions are likely to be more severe than an SOFC, since pure, high-temperature oxygen will be present, if no diluent is used.

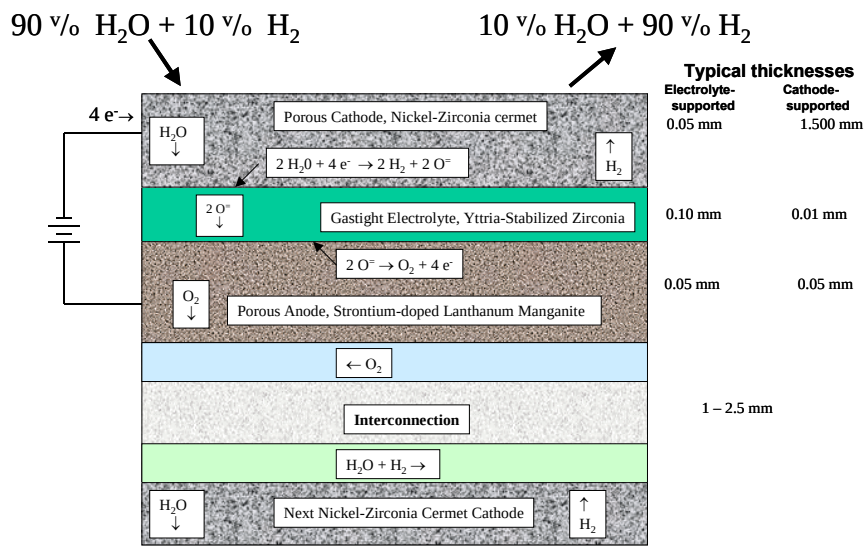

Fig. 17. Components of solid oxide cell used for high-temperature electrolysis.

The HTE system is conceptually simply in comparison to those for the thermochemical cycles being considered for nuclear hydrogen generation. In the HTE system, water is heated to superheated steam in a series of steam generators and superheaters, electrolyzed into hydrogen and oxygen in a water-containing process stream in the cell, and then separated into its constituents by condensation and/or the use of organic membranes. The only other major components are the heat exchangers used to recover the waste heat from the hydrogen and oxygen product streams prior to their discharge.

The materials challenges in the development of HTE are divided into two categories: those within the cells themselves and those in the surrounding plant. The NHI program will address those materials issues in the balance of plant and those materials issues within the cells themselves that are unique to HTE. Other materials issues within the cells will be addressed as part of the larger DOE-FE SOFC programs, hence only the materials issues and recommended R&D that are anticipated to fall within the NHI program are addressed in this document.

References

[1] G .O. Hayner, E. L. Shaber, R. E. Mizia, P. A. Lessing, R. N. Wright, T. C. Totemeier, W. E. Windes, W. R. Corwin, T. D. Burchell, J. M. Corum, J. W. Klett, R. K. Nanstad, L. L. Snead, R. E. Stoller, P. L. Rittenhouse, R. W. Swindeman, D. F. Wilson, November 7, 2003, *Next Generation Nuclear Plant Materials Selection and Qualification Program Plan*. INEEL/EXT-03-01128

[2] J. Buongiorno, INEEL, P. MacDonald, INEEL (contractor), W. R. Corwin, L. K. Mansur, R. K. Nanstad, R. W. Swindeman, A. F. Rowcliff, D. F. Wilson, I. G. Wright, ORNL, G. Was, Univ. of Michigan, September 2003, *Supercritical Water Reactor (SCWR) Survey of Materials Experience and R&D Needs to Assess Viability*. INEEL/EST-03-00693 (Rev. 1)

[3] W. R. Corwin, et al., The Gas Fast Reactor (GFR) Survey of Materials Experience and R&D Needs to Assess Viability, ORNL/TM-2004/99, April 30, 2004 (Draft)

[4] T. Allen, ANL, R. Klueh, ORNL, N. Li, LANL, July 25, 2003. *Lead-Cooled Fast Reactor (LFR) Survey of Materials Research and Development Needs*

[5] The Gas-Cooled Fast Reactor (GFR) Material Requirements for the Material Selection and Qualification Program, INEEL/EXT-04-01606 (Rev 0), August 2004

[6] O. F. Kimball and D. E. Plumblee, *Gas/Metal Interaction Studies in Simulated HTGR Helium,* HTGR -85-064, General Electric Company, Schenectady, New York, June 1985.

[7] L. C. Brown, G. E. Besenbruch, R. D. Lentsch, K. R. Schultz, J. F. Funk, P. S. Pickard, A. C. Marshall, and S. K. Showalter, "High Efficiency Generation of Hydrogen Fuels using Nuclear Power, Final technical report for the period August 1, 1999 through September 30, 2002", GA-A24285-Rev. 1, General Atomics Document issued December 2003.

3.0 POTENTIAL CANDIDATE MATERIALS SELECTIONS AND RESEARCH PLANS FOR GEN IV REACTORS

The materials requirements for the various components of each of the Gen IV reactor concepts that are being actively addressed within DOE's Gen IV Program (NGNP, SCWR, LFR, and GFR) and the systems for nuclear hydrogen production being addressed by DOE's NHI Program were described in the previous sections. Based on those requirements, developed by the SIMs or PM for their individual systems, a list of potential candidate materials for each major component were selected. The materials selected are those that were evaluated to have the greatest reasonable chance of meeting the component requirements, as described, along with a summary of their current status, in the individual reactor needs studies [1-4].

In the sections that follow, the potential candidate materials for each of the systems will be described along with the anticipated R&D that will need to be performed to downselect and qualify the materials for Gen IV service. As the descriptions of materials and R&D needs for each reactor system are better defined, they will be mutually evaluated for optimum incorporation into the overall integrated Gen IV Materials Technology Development Program.

3.1 Potential Candidate Materials Selections and Research Plans for NGNP

Three primary factors will most affect the properties and choice of the structural materials from which the NGNP components will be fabricated. These are effects of irradiation, high-temperature exposure, and interactions with the gaseous environment to which they are exposed. An extensive testing and evaluation program will be required to assess the effects that these factors have on the properties of the potential materials for NGNP construction to enable a preliminary selection of the most promising materials to be made and to then qualify those selected for the service conditions required.

Details of the research plans for the potential candidate materials selected for the NGNP

described in this section are largely discussed in conjunction with the components in which they will see service. These plans are being more fully refined as the overall system and component operating conditions become better defined. Updates on the plans will be incorporated into the next revision of this document.

Considering that the research necessary to select and qualify the materials for NGNP will, in many cases, precede that for the other reactor systems, by virtue of its accelerated deployment schedule, it will be possible to utilize the NGNP results, as part of the overall integrated Gen IV Materials Technology Program, to minimize similar research that would otherwise be required for the other reactor systems. Hence, the early definition, scheduling, and execution of the NGNP materials research program will allow the remaining systems to focus on their remaining issues.

3.1.1 General Considerations for NGNP Materials Research

3.1.1.1 Irradiation

When a material is irradiated, virtually every property may change. This includes physical dimensions, as well as mechanical, electrical, magnetic, thermo-physical and other properties. The reason for this is that the existing crystal and defect structure is deconstructed and reconstructed on an atom-by-atom basis during irradiation. In a high-dose irradiation, each atom may be displaced from its lattice site numerous times. The standard measure of radiation dose in metallic materials is the displacement per atom (dpa). Conditions during irradiation, such as temperatures, dose, dose rate, and local materials composition, determine the property changes that will ultimately result. Three of the irradiation-induced changes of greatest concern are swelling, irradiation creep, and embrittlement.

Swelling is the isotropic volume expansion of an irradiated material. It occurs by the net absorption of interstitials at dislocations, with a corresponding net number of vacancies accumulating at cavities. It may reach tens of percent or more at high does, e.g., tens to hundreds of dpa. In graphite, which has a very anisotropic crystal structure, swelling can itself be anisotropic and is highly dependent upon texture of the graphitic microstructure and the macroscopic direction of a component with respect to the crystal texture.

Irradiation creep is a shape change in compliance with an applied stress, in excess of ordinary thermal creep. It occurs even at quite low temperatures, where thermal creep is entirely negligible. Dislocation-climb creep occurs by the asymmetrical partitioning of self-interstitials and vacancies to dislocations differently oriented to the stress axis. Climb-enabled glide creep occurs when a dislocation climbs and overcomes an obstacle, permitting it to glide. Creep may therefore result directly from net climb of particularly oriented dislocations, or indirectly from any climb that triggers glide in response to the applied stress.

Embrittlement occurs, broadly speaking, by two processes. In the first type of process, hardening of the material progresses by creation of many types of obstacles by radiation. This hardening reduces ductility. Most irradiation-induced hardening centers are so small they are beyond the ability to detect with transmission electron microscopy. However, atom probe field-ion microscopy has contributed significantly to the knowledge of the structure and properties of these ultra-fine hardening features. The second type of process is grain boundary weakening, caused by preferential diffusion of transmutation products, such as helium, or tramp elements, such as phosphorus, to the grain boundary.

Swelling, irradiation creep, and embrittlement have received a great deal of experimental and theoretical attention. As a result, a certain measure of understanding of these phenomena has been achieved, but investigation of these processes in the particular alloys, graphites, and

structural composites being considered for NGNP applications will still be required under the particular conditions of interest. The activities needed to assess these changes are incorporated into the following sections of experimental plans.

3.1.1.2 High-Temperature Exposure

At high temperatures, thermally activated processes such as microstructural changes, plastic flow, and some types of fractures produce a number of time-related degradation mechanisms that must be recognized in the design and operation of high-temperature components.

In regard to microstructural changes, there are several concerns to the NGNP. First, the RPV will most likely be fabricated from a ferritic/martensitic that derives its strength from a fine precipitate of carbides formed on highly-dislocated martensite lath boundaries. With time, these precipitates will coarsen and the lath structure will reform into a fine-grain structure with much lower tensile and creep strength than the starting steel. The rate at which this aging process occurs is highly dependent on the elemental constituents that makes up the carbide microstructure. A second time-related degradation mechanism that occurs on the structural steels is that of intermetallic phase precipitation. In this process, coarse intermetallic phases precipitate that rob the matrix of solid-solution strengtheners and impart brittleness to the grain boundaries. In stainless steels and nickel-base alloys that will likely be used for the core internal components, piping, and other high-temperature components, some strengthening is often derived from stable carbides and fine dispersions of intermetallics that develop in-service. With time, these beneficial precipitates may coarsen or dissolve in preference to less desirable precipitate phases. Again, loss of strength and embrittlement are concerns. Work is needed in the NGNP materials program to define the kinetics of the precipitation processes and can predict the development of metastable, and eventually, the stable microstructures.

High-temperature yield strength and resistance to plastic flow are properties that are important in structural components. Good resistance to thermal transients, mechanical fatigue, ratcheting, and buckling depends on materials with good short-time strength properties. At the extreme temperatures expected in the NGNP components, the yield and flow properties of the structural materials are expected to be very rate sensitive and will be more sensitive to loading rates in the components. To address these issues, the materials testing program needs to produce information that can lead to improved analysis methods that accommodate greater rate dependency of short-time deformation and fracture. For very long service times there are additional concerns. The database on which allowable stresses are based is quite limited for several of the candidate materials, particularly at the upper temperature range that service in the NGNP will require. New deformation and fracture mechanisms may prevail at the long time and low stresses thought to represent steady-state operation of the NGNP. It is critical that predictive continuum damage mechanics models be developed on a sound metallurgical basis. The activities needed to assess both the microstructural stability and effects of temperature on both short- and long-term mechanical properties are incorporated into the following sections of experimental plans.

3.1.1.3 Helium Gas Cooled Reactor Environment

From a corrosion viewpoint, the internals of reactor will operate in a helium environment, and the externals of the reactor, including the pressure vessel, will operate in air. The internal metallic components of the reactor will operate at temperatures up to 1000°C and the pressure vessel will operate nominally at temperature up to 490°C with accident conditions up to 610°C.

The interactions between structural materials in the helium atmospheres associated with gas-cooled reactors have been the subject of numerous USA, Germany, England, Norway, Japan, and other places have demonstrated the importance of small changes in impurity levels, high temperatures and high gas flow rates. Metallic materials can be carburized or decarburized, and oxidized internally or at the surface. These corrosion reactions, depending on their rate, can substantially affect long-term mechanical properties such as fracture toughness, fatigue, crack-growth rate, etc.

Typical simulated advanced high-temperature gas-cooled reactor (HTGR) helium chemistries used in various previous test programs are shown in Table 8 as discussed in the helium environment for GFR. Because of the low partial pressures of the impurities, the oxidation/carburization potentials at the metallic surface of a gas mixture is established by the kinetics of the individual impurity catalyzed reactions at the surface. As shown, the main impurities are H_2, H_2O, CO and CH_4. The hot graphite core is considered as reacting with all free O_2 and much of the CO_2 to form CO, and with H_2O to form CO and H_2. In addition, in cooler regions of the core, H_2 reacts with the graphite via radiolysis to produce CH_4. Because of the change in surface temperatures around the reactor, and associated changes in reaction mechanisms and rates of reaction on bare metal versus on scaled surfaces, reaction rates and order of reactions are important.

The overall stability of the proposed helium environment that will be representative of the NGNP must be evaluated in order to ensure that testing proposed in the various experimental sections that follow is performed in environments that have consistent chemical potentials. In addition, the corrosion of metals and nonmetals must be evaluated to establish baseline data where it does not exist. Therefore, testing of both the helium environment to be used for mechanical properties and general corrosion evaluations of the candidate materials to establish their overall compatibility with that environment will be performed at temperatures up to at least 50°C above the proposed operating temperature for the various metallic components. The schedule for the these studies that are generally applicable to all metallic components is shown in the following milestone section.

The bulk of the experimental plans needed to assess the effects of the helium environment on mechanical properties of the metallic internal materials, are included in the following sections that deal with individual components. However, in addition to those studies, it will be necessary to assess the stability of the helium environment itself as well at the general effects of corrosion on the various structural materials being considered for use within the primary circuit. Those experimental plans are detailed below.

Experimental R&D plans to assess helium environment and general corrosion

A high-level summary of R&D plans and schedules for the NGNP materials research needed to meet the stated deployment time schedule is provided below.

Milestones

FY 2005

- Perform comprehensive review of the corrosion in gas-reactor helium coolant
- Upgrade existing helium corrosion loop
- Initiate evaluation of stability of predicted range of impurities in helium

FY 2006

- Complete evaluation of stability of predicted range of impurities in helium

- Perform 3000h exposure testing of preliminary candidate materials at 1000°C in anticipated helium atmospheres

FY 2007

- Perform 3000h exposure testing of preliminary candidate materials at 1000°C in off-normal helium atmospheres
- Provide recommendations of corrosion resistance for selection of primary candidate materials
- Initiate predictive modeling of long-term performance of candidate materials in NGNP helium coolant

FY 2008

- Initiate confirmatory 3000h exposure testing of primary candidate materials at 1000°C in anticipated and off-normal helium atmospheres

FY 2009 and 2010,

- Conclude confirmatory 3000h exposure testing of primary candidate materials at 1000°C in anticipated and off-normal helium atmospheres
- Complete predictive modeling of long-term performance of candidate materials in NGNP helium coolant

3.1.2 NGNP High-Temperature Metallic Components

3.1.2.1 Reactor Pressure Vessel System Materials Selection and Issues

A summary of the anticipated operating conditions and component sizes for the NGNP pressure vessel system is provided in Table 9. The vessels will be exposed to air on the outside and helium on the inside, with emissivity of the chosen material an important factor regarding adequate radiation of heat from the component to the surrounding air to ensure adequate cooling during accident conditions. The materials tentatively selected for gas-cooled RPV service are low-alloy ferritic/martensitic steels, alloyed primarily with chromium and molybdenum.

The currently estimated maximum normal operating temperature of 490ºC for the RPV and CV is in the creep range for any ferritic or ferritic-martensitic steel currently in any part of the ASME Boiler and Pressure Vessel Code, while the maximum abnormal (off-normal accident) temperature of 610ºC for 50 hours is approaching the limit in the Code and provides an even greater challenge. For the ferritic steel option, there are four classes of advanced, higher alloy ferritic-martensitic steels that have been identified as potential candidate alloys, while the 2 1/4Cr-1Mo alloy is listed especially for the lower temperature design. These five alloy classes are listed in the order recommended as priority for consideration as the structural material for the RPV and CV components for the NGNP. Additionally, the class of austenitic stainless steels is listed as well, as a fallback option, but an option that retains the potential for operation at the desired temperatures, especially considering the abnormal temperatures under accident conditions, albeit at a significantly higher capital cost.

Table 9. Reactor pressure vessel system operating conditions affecting candidate material selection for the NGNP.

Component	Normal NGNP System Operating Conditions		Abnormal Conditions	Estimated Component Size
	Temp. [ºC] Pressure [MPa]	Neutron Fluence, E>0.1 MeV (dpa)		
Reactor Pressure Vessel (RPV)*	400-490ºC [7.4-8.0 MPa]	$3x10^{19}$ n/cm^{-2} per 60 years (0.0075 dpa)	≈520-610°C at mid-thickness for 50 h [7.4-8.0 MPa]	Diameter:≈9m Thickness:100-300mm Height: ≈24m
Cross Vessel (CV)	400-490ºC [7.4-8.0 MPa]	$3x10^{19}$ n/cm^{-2} per 60 years (0.0075 dpa)	<610°C for 50 h [7.4-8.0 MPa]	Diameter: ≈2.5m Thickness: ≈100mm Length: 4-5m
Power Conversion Vessel (PCV)	200ºC [5.0-6.0 MPa]	Negligible $3x10^{14}$ n/cm^{-2} per 60 years	300ºC [5.0-6.0 MPa]	Diameter: ≈7-9m Thickness: 100-200mm Height: ≈35m
Closure Bolting	400-490ºC	$3x10^{19}$ n/cm^{-2} per 60 years (0.0075 dpa)	≈520-610°C for 50 h	

* Temperatures are dependent on specific reactor design.

1. Class of 9Cr-1MoVNb

   a. This class of materials has the most industrially mature high strength database. For example, the 9Cr-1Mo-V (grade 91) alloy is ASME Code approved to 649ºC for Section III, Classes 2 and 3 components and is in the final stages of approval for inclusion in Subsection NH for Class 1 applications.

   b. There are, of course, limits to Code applicability involving time at temperature, thickness of forgings, etc.

   c. Within this class of alloys, it seems prudent to consider variants such as 9Cr-1MoWV (grade 911), (grade 92), etc., because available research data show significantly improved high temperature strength for those alloys relative to the grade 91.

2. Class of 7-9Cr2WV

   a. Various alloys of this class are currently being developed under the Fusion Materials Program.

   b. There is a smaller database than for the 1st class mentioned above, but some of these alloys offer the possibility of better high strength properties.

   c. Examples of specific alloys within this group include F82H (7.5Cr2WV), JLF1 and EUROFER (9Cr2WV).

   d. A potential advantage of these alloys is the fact that they have also been developed to have reduced activation under neutron irradiation with resultant advantages for decommissioning.

3. Class of 3Cr-3WV

   a. This class of alloys offers good high strength properties, but is one of the newer alloys under development and, as a result, has a very limited database. In relatively modest section sizes evaluated to date, the yield strength of the specific 3Cr3WV alloy underdevelopment at Oak Ridge National Laboratory (ORNL) is about twice that of the SA508 grade 3 forging steel used for current LWR RPVs.

   b. Because of its lower alloying content, it offers the potential for substantially lower cost than those more highly alloyed steels in the two classes discussed above. However, because of its lower alloying content, environmental effects at high temperatures may be limiting.

   c. There are indications that this alloy offers the possibility of no need for a post-weld heat treatment.

   d. One other alloy in this class is a 2.75Cr-1MoV variant under development in Russia.

4. Class of 12Cr-1MoWV

   a. The alloy designated HT9 is an older existing alloy within this class of materials.

   b. The HT9 alloy has a broad database available, but is has poorer properties than, e.g., 9Cr-1MoVNb.

   c. There are some more recent 12Cr variants that offer improved properties relative to the HT9. For example, the HCM 12A alloy has a good database and is currently approved by ASME Code Case 2180 to 649ºC for application in Sections I and VIII. Additionally, a Japanese alloy designated SAVE12 appears to have good high temperature strength, but the available database needs to be reviewed.

5. Fallback for lower temperature operation: 2.25Cr-1Mo

   a. Of course, there is an extensive database for this alloy, including data in different operating environments such as helium.

   b. Another advantage is the extensive industrial experience with this alloy in many different applications around the world.

   c. However, its high-temperature strength is significantly lower than the alloy classes discussed above and, as such, is only applicable for substantially lower vessel temperature, such as in the case of the HTTR at JAERI.

6. Class of austenitic stainless steels (types 304, 316, etc.)

   a. There is an extensive database for many of these alloys, including some data in helium with various impurity contents.

   b. There is extensive industrial experience with this class of steels in many different applications, including in irradiation environments.

   c. The tensile strengths of these alloys are much inferior to the ferritic-martensitic steels, but their strength properties do not degrade as rapidly at high temperatures. However, at temperatures in the range of 650ºC, their maximum allowable stresses are not necessarily superior to some ferritic-martensitic steels. The primary reason for inclusion of the class of stainless steels here is their metallurgical stability at the higher temperatures currently anticipated for the abnormal conditions.

   d. In general, stainless steels have superior oxidation and corrosion resistance in many media, but they are not immune to severe degradation in some common environments.

Potential candidate alloys for the PCV could include those for the RPV and CV, but there are lower cost options available because of the lower operating temperatures. Even under abnormal conditions, the PCV will be subjected to temperatures about the same as those currently used for commercial LWR vessels. Moreover, the size of the vessel is well within normal fabrication capability. Thus, the current LWR pressure vessel materials, SA508 grade 3 class 1 forgings or SA533 grade B class 1 plates are potential candidates, as is the 2 1/4Cr-1 Mo alloy, dependent on material compatibility issues. It is noted that the CV is welded to the PCV and the welded joint with dissimilar materials must be a consideration.

Potential candidate alloys for high-temperature closure bolting are alloy 718 and types 304 and 316 stainless steels. Although alloy 718 has superior strength, it is currently approved up to 566ºC in ASME Section III, Subsection NH. The two types of stainless steels, however, have allowable stress intensities for bolting up to 704ºC. An evaluation of the database for the alloy 718 will be conducted to assess the data needed, if any, for increasing the allowable temperature to that required for the NGNP. Also, the estimated irradiation exposure for closure bolting will be assessed to evaluate the need for inclusion of bolting in the irradiation program.

Expected research, testing, and qualification needs for RPV materials

The first step in the research program on materials for the RPV system will be a comprehensive and detailed review of the potential candidate alloys discussed. The existing database for those alloys will be assembled, analyzed, and evaluated with respect to the design and operating requirements presented above. Principal topics for review will include: fabrication and transportation for the RPV ring forgings, effect of thickness on mechanical and fracture properties, and high-temperature strength, stability, and long-time performance under irradiation of the materials.

Based on the results of the materials review, detailed research enabling the inclusion of the needed RPV materials into the ASME Code for the materials of construction will be defined and performed. For an alloy such as 9Cr-1MoV (grade 91) that has already attained Code approval for operation to 649ºC, additional testing will be required but not nearly as much as that required for an alloy that is not currently approved for Code use. However, in that regard, given the currently estimated abnormal condition temperature of 610ºC, data would be required up to 660ºC for ASME Code approval. Such data are not available for most of the potential RPV candidate materials. The extension of the required data bases and ASME Code acceptance of the materials for NGNP RPV service will need to be developed and closely coordinated with the high-temperature design methodology activities covered further below.

Additionally, application-specific information and data are required, including:

1. Effects of the helium coolant on the potential candidate alloys, including the use of a weld overlay cladding on the inner surfaces of the RPV and CV, such as type 308 stainless steel.
2. Irradiation effects data on the RPV and CV materials, and possibly the bolting materials are needed for regulatory requirements and for assessment of structural integrity. Similarly, long-time thermal aging data are needed as a complement to the irradiation effects data for potential embrittlement due to either hardening or softening of the RPV materials and the closure bolting materials.
3. The external air environment is significant in that the pressure vessel must be able to radiate heat at 490ºC throughout the life (60 years) of the reactor and at 610ºC under

accident conditions. It is therefore necessary to have a stable, high-emissivity surface on the pressure vessel material such as, 9Cr-1MoVNb and variants, at elevated temperatures. While, the emissivities of steel can be increased by the formation of an oxide film, the conditions under which this film can be created and the stability of this film in air (including the effect of humidity) at operating temperature needs to be established. An industrial partner will be used to provide for scaling of the materials and methods that have proven to be viable. Emissivity data on the various potential candidate materials are needed to ensure adequate radiation from the outer surface to the air in the cavity between the RPV and surrounding concrete during accident conditions, including the possible need to incorporate a high emissivity coating on the outer surface of the RPV. Testing to establish limitations of potential candidate materials emissivity and the performance and durability of proposed surface modifications to improve emissivity must be performed early to provide design feedback and limitations.

4. Determination of the RT_{NDT} for Section III, Class 1 components such as the RPV and CV. Fracture toughness data will be required, primarily for regulatory needs, but also for providing complete information to allow for a comprehensive assessment of structural integrity for the pressure boundary components.
5. Damage accumulation data are needed due to long-time high temperature exposure. Particular attention is needed in the area of welding to ensure that the issues of hot cracking and premature creep failures in the heat-affected-zones of ferritic-martensitic steels, observed in the fossil industry, are adequately addressed.
6. Vessel fabricability must be comprehensively evaluated. Availability of the very large forgings required and both their weldability and the attainment of the required through-thickness properties of the higher-alloy steels in such thick sections are key issues. The possible requirement for field fabrication, including postweld heat treatment, must be assessed.
7. Currently, the estimated maximum temperature for the RPV and CV materials under abnormal operating conditions is 610ºC with the potential for operation at that temperature for about 50 h and, more importantly, at full operating pressure or higher. This temperature is near the aforementioned maximum that is currently proposed for Section III, Subsection NH for 9Cr-1Mo-V (grade 91). For the other ferritic alloys under consideration, extending application to these abnormal conditions will require reevaluation of the background data used to obtain the currently proposed allowable stresses for Subsection NH, and conduct of additional testing to obtain sufficient data at temperatures to 50ºC beyond the highest envisaged abnormal temperature, reanalysis of all the data, and a proposed Code Case to obtain inclusion for such operation with that material within the ASME Code rules.

Experimental RPV R&D plans

A high-level summary of R&D plans and schedules for the NGNP RPV materials research needed to meet the stated deployment time schedule is provided below.

Milestones

FY 2005

- Design and fabricate low-flux irradiation facility

- Initiate specimen capsule design activity for irradiation of specimens in the low flux test reactor facility.

FY 2006

- Perform comprehensive review of the potential candidate alloys
- Assemble, analyze, and evaluate existing database
- Testing potential candidate ferritic RPV/CV materials for limiting high-temperature behavior up to at least 650ºC.
- Initiate preliminary mechanical, fracture, and physical property tests in impure helium and in air.
- Perform scoping combined loading cycle tests for initial assessment of high-temperature design properties.
- Initiate thermal aging in air for 1000, 3000, and 10,000 hours at 500ºC, followed by short-term aging at accident temperatures.
- Initiate evaluation of aged tensile, hardness, creep, and toughness behavior and microstructural stability.
- Perform high-flux irradiations to obtain preliminary irradiation-effects data.
- Procure welding consumables
- Initiate development of welding techniques and processes and postweld heat treatment schedules,
- Select and procure emissivity measurement system
- Evaluate emissivity layer development techniques

FY 2007

- Continue baseline mechanical, fracture, and physical property tests in impure helium and in air and add weldments
- Initiate long term aging studies of materials and weldments in the impure helium environment for mechanical and microstructural changes
- Initiate low-flux irradiations or base metals, weldments and aged materials
- Initiate screening tests of emissivity surfaces
- Evaluate approaches for aging emissivity surfaces
- Initiate evaluation of aged emissivity surfaces

FY 2008 and 2009

- Complete primary baseline testing program
- Select two prime candidate materials for more comprehensive testing, especially as regards irradiation and environmental effects
- Select emissivity layer development technique that is most compatible with field application
- Continue evaluation of aged emissivity surfaces

- Work with industrial company to create field applied emissivity layer
- Initiate testing of aged field applied emissivity layer

FY 2010

- Complete primary irradiated and aged materials testing programs

FY 2011 and beyond

- Complete supplementary long-term aging materials test program
- Conclude testing of field applied emissivity layer
- Complete report documenting field-friendly approach and emissivity results

3.1.2.2 Metallic Reactor Internals Material Selection and Issues

The components addressed in this subsection may be classified as core supports and core internals. Included are the core barrel, inside shroud, core support floor, and upper core restraint. Also, the shutdown cooling system (SCS) shell and SCS tubes are included in this grouping. The conditions that affect the materials selection for these components, as well as the other high temperature components likely to be constructed from metallic alloys, are provided in Table 10. Depending on the specific component, the normal operating temperatures will range from 600 to 1000°C. However, the maximum temperature estimated for accident conditions ranges from 600 to 1200°C from one component to another. The maximum temperature (1200°C) is by no means a certainty, and possibility exists that an innovative design could significantly reduce this temperature for some components. In regard to loading, these components are not pressure boundary components, except for the SCS tubes. In some cases, however, the weight loads can be quite significant. The fatigue, thermal-fatigue, seismic, and other loadings that could produce damage are largely unidentified at this time. Compatibility with the coolant gas is a requirement for core metallic internals. In addition, radiation and thermal aging effects on properties are important considerations in material selection. Fabrication and joining are always factors to consider. Finally, their code status is important. Metallic core support structures must conform to ASME Sect. III, Div. 1, Subsect. NG. Other core internals may conform to different rules. It is not clear whether the SCS tubes will be considered to be Class 1 or Class 2 components. At this point in time, it is best to assume that the materials of construction, regardless of the applicable subsection, will be limited to those listed in ASME Section II, Part D, Tables 2A, 2B, and 4. These tables cover temperatures to 370°C for ferritic alloys and 425°C for austenitic alloys. Subsect. NH of Section III permits construction to higher temperatures for a limited number of materials. These are 2 1/4Cr-1Mo steel (Class 1), 304H stainless steel, 316H stainless steel, and alloy 800H. Potential candidate materials for the internals, as well as the other high temperature components likely to be constructed from metallic alloys, are listed in the Table 11. These materials include alloys for which significant databases exist and new state-of-the-art alloys which are being developed for other high-temperature applications. Alloy 617, alloy X, and alloy XR are the leading potential metallic candidates for service above 760°C. These alloys were chosen because they have been developed for use in earlier gas-cooled reactor projects. However, the upper limit of these materials is judged to be 1000°C. Any component that could experience excursions above 1000°C would have to have very high temperature capability in regard to strength and corrosion resistance. Carbon-carbon composites are the leading near-term potential candidates, but an oxide dispersion strengthened (ODS) alloy could be an alternative for service in components that might experience temperature excursions to 1200°C.

Table 10a. Conditions affecting materials selection for high-temperature metallic NGNP components.

Condition	SCS Tube	Core Barrel	Core Support Floor	SCS Shell	Inside Shroud	Upper Core Restraint
Normal Temperature	600°C	600°C	600°C	600°C	600°C	600°C
Maximum Temperature	600°C	700°C	700°C	1200°C	1200°C	1200°C
Loading	Thermal Stress, LCF/HCF	Core Weight	Core Weight	Own Weight	Own Weight	Own Weight
Environment Issues	Helium, Pressurized water, SCC,	Helium	Helium	Helium, Off Normal Helium	Helium, Off Normal Helium	Helium, Off Normal Helium
Radiation Issues	Not significant	Negligible <0.005DPA	Negligible <0.005DPA	Negligible <0.005DPA	Negligible, Avoid Co	Negligible, Avoid Co
Aging Issues	Some	Some	Some	None, if CC composite	None, if CC composite	None, if CC composite
Joining Issues	Some	Some	Some	N/A, if CC composite	N/A, if CC composite	N/A, if CC composite
Manufacturing Issues	None	None	None	Major, if CC composite	Major, if CC composite	Major, if CC composite
Prime Candidate Materials	316FR, 800H	800H, 316FR	800H, 316FR	CC composite, Alloy 617	CC composite, Alloy 230	CC composite, Alloy 230

Table 10b. Conditions affecting materials selection for high-temperature metallic NGNP components.

Condition	IHX Indirect	Hydrogen HX	Hot Duct	Bellows	He Circulator	Primary to Secondary Piping	Recuperator
Normal Temp	1000˚C	950˚C	600˚C	600˚C	600˚C	950˚C	600˚C
Maximum Temp	1000˚C	950˚C	700˚C	700˚	600˚C	950˚C	600˚C
Loading	Thermal Transients	7 MPa, Cycles	Own Weight	Fatigue	Fatigue, Creep Fat.	7 MPa	
Environment Issues	Helium	Helium, Heat transfer fluid	Helium	Helium	Helium	Helium, Heat Trans Fluid	
Radiation Issues	None	None	None	None	None	None	None
Aging Issues	Some	Some	Some	Some	Some	Some	Some
Joining Issues	Some	Some	Some	Some	Some	Some	Some
Manufacturing Issues	Major	Some	Some	Major	Some	Major	Some
Prime Candidate Materials	Alloy 617	Alloy 617, Alloy 230	Alloy 800H, 316FR	Alloy 800H, 316FR	316FR	Alloy 617, Alloy XR	347 SS

Table 11. Potential candidate materials selection for high-temperature metallic NGNP components.

NOMINAL COMPOSITION	UNS No.	COMMON NAME	CODE MAX TEMP	DATA MAX TEMP	HELIUM EXPERIENCE
Ni-16Cr-3Fe-4.5Al-Y		Haynes 214		1040	
63Ni-25Cr-9.5Fe-2.1Al	N06025	VDM 602CA	980	1200	
Ni-25Cr-20Co-Cb-Ti-Al		Inconel 740		815	
60Ni-22Cr-9Mo-3.5Cb	N06625	Inconel 625	900		
59Ni-23Cr-16Mo-Fe-Al	N06059	VDM 59	760		
53Ni-22Cr-14W-Co-Fe-Mo	N06230	Haynes 230	980	1100	
Ni-22Cr-9Mo-18Fe	N06002	Hastelloy X	900	1000	Yes
Ni-22Cr-9Mo-18Fe		Hastelloy XR		1000	Yes
46Ni-27Cr-23Fe-2.75Si	N06095	Nicrofer 45	815		
45Ni-22Cr-12Co-9Mo	N06617	Inconel 617	980	1100	Yes
Ni-33Fe-25Cr	N08120	HR-120	900	930	
35Ni-19Cr-1 1/4Si	N08330	RA330	900		
33Ni-42Fe-21Cr	N08810	Incoloy 800	980	1100	Yes
33Ni-42Fe-21Cr	N08811	800HT	900	1100	
21Ni-30Fe-22Cr-18Co-3Mo-3W	R30566	Haynes 556	900	1040	
18Cr-8Ni	S30409	304H SS	815	870	Yes
16Cr-12Ni-2Mo	S31609	316H SS	815	870	Yes
16Cr-12Ni-2Mo		316FR		700	
18Cr-10Ni-Cb	S34709	347H SS	815	870	
18Cr-10Ni-Cb		347HFG	730	760	
18Cr-9Ni-3Cu-Cb-N		Super 304	815	1000	
15Cr-15Ni-6MnCb-Mo-V	S21500	Esshete 1250	700	900	
20Cr-25Ni-Cb		NF 709		1000	
23Cr-11.5Ni-N-B-Ce		NAR-AH-4	815	1000	

For service in the temperature range of 600 to 760°C, alloy 800H appears to be a leading candidate. A restricted chemistry version of 800H, namely alloy 800HT, is considered, as well. Alternative alloys to 800H exist, but they have little experience in nuclear systems at temperatures above 600°C.

For temperatures at 600°C and below, a wide choice of materials is available. Those alloys contained in ASME Sect. III, Subsect NH are leading candidates. Also, 9Cr-1Mo-V steel is in the final stages of acceptance into Subsect. NH. An alternative low carbon 316 stainless steel (316FR) is considered to be a strong candidate since the steel could achieve Code approval with less effort than other alternatives.

Compatibility with the helium coolant and irradiation resistance of the potential candidate materials needs to be addressed. The experience base that exists must be evaluated for the different alloys regarding temperatures, fluences, and environments and/or expectations based upon what type of data or models must be determined.

Expected research, testing, and qualification needs for metallic reactor internals materials

The first step in the research program on materials for the metallic reactor internals will be a comprehensive and detailed review of the potential candidate alloys identified in Table 11. The

existing database for those alloys will be assembled, analyzed, and evaluated with respect to the design and operating requirements described above. Principal topics for review will include: high-temperature strength, stability, and long-time performance under irradiation of the materials, effects of helium typical of gas reactor coolant on the mechanical and physical properties of the materials, codification status, prospects, and needs, including maturity and limitations of the high-temperature design methodology for each material selected.

The review will compile the sources for the data and lead to a draft "handbook" of representations for the data that will aide in the down-select of candidates for more detailed evaluations. During this same period of review, an evaluation will be undertaken of available resources needed for the production of engineering design data. Test procedures and guidelines will be developed that will be consistent with the requirements of regulating bodies. Sources will be identified for the supply of the required products of candidate alloys.

The neutron fluences accumulated in the metallic core internal materials are expected to be low relative to the tolerances of the structural alloys. Nevertheless, these will be reviewed and details developed for confirmatory testing and evaluation.

To some extent, the DOE-supported program on ultrasupercritical steam boiler will provide much needed guidance on welding alloy 617, alloy 230, and Inconel 740. Most of the potential candidate alloys identified for service at 760°C and below have been welded in thick sections. These include alloy 800H and 316FR stainless steel. This work will be reviewed to evaluate the maturity of the infrastructure for producing relatively thick-section welds of the advanced alloys needed for service to 1000°C.

Experimental metallic reactor internals materials R&D plans

A brief summary of R&D plans and schedules for the NGNP metallic reactor internals materials needed to meet the deployment time schedule is provided below. The schedule for these tasks is contingent upon funding availability**.**

Milestones

FY 2005

- Issue report summarizing initial Alloy 617 database.
- Issue letter report summarizing results of initial scoping tests of creep and stress-strain evolution
- Initiate conceptual design of long-term test systems
- Issue White Paper Report on aging effects
- Assemble, analyze, and evaluate existing database
- Develop procurement specifications for leading base metals and welding consumables
- Order representative products of candidate materials
- Initiate mechanical, fracture, and physical property tests to supplement existing databases and support the needed development of high temperature design methodology
- Initiate aging of potential candidate alloys including some weldments

- Evaluate aged microstructures
- Developed detailed needs for high-flux irradiations to obtain irradiation-effects data
- Produce weldments for mechanical testing, aging studies, and microstructural characterization

FY 2006

- Continue baseline mechanical, fracture, and physical property tests in impure helium and in air, adding fatigue and crack growth testing and weldments
- Construct isochronous curves to 10,000 hours
- Initiate complex stress and strain testing in helium will be started to evaluate parameters describing cumulative damage
- Re-evaluate the materials data requirements for constitutive equation refinement for design methodology
- Rank candidate alloys on their performance in mechanical testing and microstructural evaluations aged to 10,000 hours and provide input to computational modeling activity
- Fabricate irradiation capsules
- Compare microstructural evaluations of aged materials with computational models to qualify microstructural parameters for damage prediction models and rank candidate weld metals
- Provide comparative data for constitutive behavior of weld versus base for the design methodology activity

FY 2007 and 2008

- Evaluate results from testing in air and helium to reformulate continuum damage models to accommodate aging, environmental, and cyclic loading effects
- Evaluate alloy 800H and alloy 617 for U.S. and international design codes and determine additional testing needs
- Assess needs for shift to alternate alloys, if results indicate a favorable trend
- Evaluate aging to 25,000h and incorporate results into continuum damage models for high-temperature life prediction
- Evaluate damage concepts utilized in the API-ASME post construction rules
- Perform irradiations of base metals, weldments and aged materials
- Provide additional weld data for modeling efforts and code rule development
- Review ultrasupercritical steam fabrication technology for infrastructure needs

FY 2009

- Complete primary irradiated and aged materials testing programs
- Provide data to assist the development of code rules accounting for aging effects

FY 2010 and beyond

- Complete supplementary long-term aging and creep test program

3.1.2.3 Intermediate Heat Exchanger Materials Selection and Issues

The conditions that effect the selection of materials for the IHX are also provided in Table 10. For the Indirect Power Generation Cycle, the normal operating temperature is 1000°C (1832°F) and the maximum temperature in the event of an accident is thought to be similar to the normal operating temperature. Pressure is 7 MPa, but the difference from primary to secondary circuit is small (0.1 MPa) and the IHX will be contained within a pressure vessel. Environmentally-induced degradation of the metals from impurities in the helium is a concern. Aging effects are a concern for very long-time thermal exposure since embrittlement could affect the performance of the IHX during thermal transients. Welding and fabrication issues exist that will depend on the IHX design details. Again, the leading potential candidates for service at 1000°C listed in Table 11 are alloy 617, alloy X, and alloy XR. Other nickel base alloys will be considered. These include CCA617, Inconel 740, and alloy 230. There is a possibility that the compact IHX could be fabricated from a C/C composite.

Alternate IHX designs such as tube-and-shell introduce concerns that can only be addressed when more is known about the performance requirements. The operating temperature and environment for the indirect power generation cycle are not likely to change. Rather, the loading conditions will require a database that is extended to a broader range of design criteria than the reference compact IHX configuration. Except for the fact that the tube and shell IHX would be helium to helium, the design and associated materials issues might be similar to the heat exchangers already evaluated in the German and Japanese gas-cooled programs.

The NGNP hydrogen plant heat exchanger (HX) will operate at 950 to 1000°C and will experience an operating input pressure as high as 7 MPa. Details of the HX are unknown. The operating pressure and corrosion potential of heat transfer fluid to the hydrogen plant are unknown and these will have influence on the choice of materials for the HX. The HX design will likely result in only about 10% of the power diverted to the hydrogen plant and the remaining 90% to the turbine. It seems likely that thermal stresses and expansion loads will be a concern in the HX if it is a tube and shell design. A compact unit similar to the IHX will also present problems with respect to fabrication and inspection. A design methodology is needed for this relatively complex structure and characterization of materials will be an essential element of this technology. Again, the materials of construction are subject to environmental and aging-induced degradation. In addition to corrosion effects of the impurities in the helium, there may are concerns about corrosion effects or even mass transfer in HX should molten salts be used for heat transfer in the hydrogen plant. These issues cannot be adequately assessed until a more mature design of the IHX evolves.

Expected research, testing, and qualification needs for IHX materials

The first step in the research program on materials for the NGNP IHX will be a comprehensive and detailed review of the potential candidate alloys identified in Table 11. Since most of the relevant information needed for materials for the IHX will be included in that needed for the metallic reactor internals, only limited additional information will be required, but will include fabrication issues for the geometries, joining, and metallurgical conditions specific to heat exchangers as well as potential materials compatibility issues relating to the possible use of molten salt as a secondary-side coolant for the hydrogen generation associated with the NGNP.

It will be necessary to decide if the fabrication processes should be selected to produce a

material of optimum metallurgical condition or if an off-optimum material condition is satisfactory. Materials performance in the thin sections and high heat flux associated with heat exchangers may require alternate microstructures for improved performance. At 1000°C, most of the wrought nickel base alloys require relatively coarse grain size for good creep strength but fatigue resistance is best for fine grain size.

Since even the preliminary design for the heat exchangers in the NGNP has not been identified, much of the initial planning on materials needs done to date has focused on relatively generic issues expected to be germane to most very high-temperature metallic heat exchanger concepts. These plans will need to reevaluated and focused more closely on specific designs, once they have been identified.

Experimental IHX materials R&D plans

A brief summary of R&D plans and schedules for the NGNP IHX materials needed to meet the deployment time schedule is provided below. The bulk of the research needs for these materials will be addressed by the more extensive program outlined for the reactor internals. Supplemental tasks addressing component-specific needs are included below. The schedule for these tasks is contingent upon funding availability.

Milestones

FY 2005

- Initiate joining studies, with emphasis on diffusion bonding
- Initiate aging studies of IHX materials
- Initiate exploratory testing to establish the effect of fabrication variables on required creep and fatigue properties
- Perform comprehensive review of potential candidate alloys

FY 2006

- Evaluate relevance of metallic internals research program for additional needs for IHX materials
- Initiate development of procedures for bench testing of small IHX models

FY 2007 and 2008

- Initiate testing of IHX bench models for metallurgical performance
- Initiate testing of materials compatibility for specialized metallurgical condition of IHX materials

FY 2009

- Complete materials testing programs
- Complete assessment and development of fabrication methods and required infrastructural needs

3.1.2.4 Recuperator, Piping, and Valve Materials Selection and Issues

The piping, valves, and recuperators include a number of components that operate at a wide range of conditions. These are also listed in Table 10 and include the hot duct and bellows in the cross vessel, the butterfly valve and ducting in the SCS helium circulator, and the recuperators in the power generation unit. Normal operating temperatures for these components range from 600 to 1000°C, with only modest increases for accident conditions. The mechanical

loading in the hot duct is due to its own weight but the bellows will experience loads associated with the expansion it is designed to accommodate. The loads are not well defined but will include fatigue-type conditions. Additionally, changes in the system design from the reference concept to indirect cycles or other coolants would dramatically affect operating conditions.

The status of most components in the reference concept turbine system is covered below, but the recuperator, is included here. The operating temperature is relatively low, with a 600°C inlet gas temperature from the turbine exhaust and a less than 200°C outlet temperature. Recuperator technology for the temperatures and pressures of operation is relatively mature, using fine-grained 300 series stainless steels, such as type 347. Since relatively thin sections will be present, there is concern that environmental effects could be significant. Also, long-time exposure of 300 series stainless steels often leads to sigma phase embrittlement.

The primary-to-secondary piping operates at 950°C and will experience an operating pressure as high as 7 MPa. Creep-type conditions will prevail. Further, thermal stresses and expansion loads are always a concern in such piping systems. Again, the materials in all components are subject to environmental and aging-induced degradation.

The leading potential candidate alloys for all components discussed above are identical to those selected for the metallic core components. Alloy 617 is the lead for service above 760°C. Alloy 800H is the lead for 600 to 760°C. A number of choices exist for alloys that are intended for service to 600°C.

Expected research, testing, and qualification needs for recuperator, piping, and valve materials

An initial comprehensive and detailed review of the potential candidate alloys identified in Table 11 will be performed. Since most of the relevant information needed for materials for the recuperators, piping, and valves will be included in that needed for the metallic reactor internals, only limited additional review will be required, but will include the status of weldment strength factors for piping, weld categories, and dissimilar weld metals and the identification of the technologies that need to be developed to provide confidence in the adequacy of existing construction codes and the reliability of life-prediction models for these NGNP components.

Experimental R&D plans for recuperator, piping and valve materials

A brief summary of R&D plans and schedules for the NGNP recuperator, piping and valve materials needed to meet the deployment time schedule is provided below. The bulk of the research needs for these materials will be addressed by the more extensive program outlined for the reactor internals. Supplemental tasks addressing component-specific needs are included below. The schedule for these tasks is contingent upon funding availability.

Milestones

FY 2006

- Perform comprehensive review of the potential candidate alloys
- Initiate baseline testing and aging of piping materials
- Review performance requirements for the primary to secondary piping and the hydrogen plant HX for supplemental materials needs
- Develop details of testing program to address special joining issues identified in the comprehensive review

FY 2007

- Perform detailed evaluation of recuperator needs based on manufacturer experience for similar operating conditions
- Review updated creep, rupture, relaxation, and fabrication technology data accumulated on recuperator materials from DOE-sponsored work on microturbines
- Initiate limited testing to produce data design analysis of the recuperator
- Initiate confirmatory testing to improve confidence in the predictive methods for recuperator performance in helium
- Initiate testing of similar and dissimilar welds in piping

FY 2008 and 2009

- Provide initial required creep data for high temperature design methodology task
- Perform model tests of recuperators and bellows for metallurgical performance
- Evaluate the performance of constitutive equations, analysis methods, and continuum damage models based on data from tests on welded piping
- Perform commercial scale demonstration of capability to provide high-quality thin sheets for producing recuperator corrugated heat exchange surfaces.

FY 2010

- Complete primary materials testing program on aged and unaged materials
- Provide materials data needed for development of continuum damage models for piping materials
- Identify primary failure mechanisms from model testing

FY 2011 and beyond

- Complete very long-term creep behavior assessment of piping materials

3.1.2.5 Power Conversion System Materials Selection and Issues

Three very important components in the NGNP power conversion system (PCS) are the turbine inlet shroud, the turbine blades and disks, and the recuperator (described in the previous section). The first two, covered in this section, operate continuously at very high temperatures, ~1000°C for the inlet shroud and perhaps almost as high for the turbine blades. Off-normal (accident) temperatures for all of these components are about the same as their maximum operating temperatures. The pre-cooler and inter-cooler (both He-H_2O heat exchangers) are also important components but operate under conditions and temperatures that are standard commercial technology. Additionally, changes in the system design from the reference concept to indirect cycles or other coolants would dramatically affect operating conditions.

The turbine inlet shroud accepts the coolant exiting the hot duct and directs it to the turbine inlet. It is insulated to minimize thermal gradients and heat loss across the shroud wall. There is, however, a stiffening element or collar between the shroud and the turbine that is not insulated and experiences the maximum system operating temperature, 1000°C. This non-insulated collar can be exchanged at each period of planned turbine maintenance (nominally every 7 years). The boundary/container material for the shroud insulation must also withstand the

1000°C helium temperature. Prime potential candidates for the non-insulated turbine inlet shroud collar are Alloy 617 and the cast Ni-base alloys shown in Table 12 for the turbine blades; the insulation boundary/container material could be Alloy 617 or a C/C composite.

Table 12. Operating conditions affecting candidate material selection for NGNP higher temperature PCS components and potential candidate materials.

PCS Component	Operating Temperature/Life	Neutron Fluence	Environment	Potential Candidate Materials
Turbine Inlet Shroud	1000°C/7 years	Negligible	Helium	Alloy 617 Cast Ni-base [see Blades] C/C Composites [insulation package]
Turbine Blades	1000°C or 900°C with blade cooling/7 years	Negligible	Helium	Alloy 713LC IN-100 IN-738 Mar-M 247 Nimonic alloy 115 [wrought]
Turbine Discs	750°C with cooling/>7 years	Negligible	Helium	Hastelloy X Hastelloy XR Hastelloy S Alloy 617 Alloy 625 Nimonic 80A

The turbine blades may also be replaced at the 7-year maintenance intervals. If blade cooling is not utilized, the maximum temperature of the turbine blades will be in the range 950-1000°C. Centrifugal stresses will be very high so that it may be desirable to cool the blades to ~ 900°C. Even with such cooling, the use of cast high-strength Ni-base alloys (see Table 12) will be necessary.

The temperature of the turbine disks will probably be limited to 750°C by cooling of the first six stages of the turbine. One or more of the wrought Ni-base alloys listed in Table 12 should be suitable as the disk material. The disks could be changed at the 7-year maintenance interval or simply inspected, decontaminated, and/or cleaned.

Expected research, testing, and qualification needs for PCS materials

The first step in the research program on materials for the NGNP PCS will be a comprehensive and detailed review of the potential candidate alloys identified in Table 10. Preparation of a materials test program in support of PCS component materials requires knowledge and understanding of the materials requirements dictated by the operating conditions of those components. For the turbine inlet shroud collar and the turbine shroud insulation package container/boundary, the property of greatest importance is very high-temperature creep strength. Further, it is extremely important that the creep behavior (strength and ductility) not be

degraded by gas-metal interactions (reaction of the material with impurity gases in the primary coolant helium to cause carburization, decarburization, and/or internal oxidation) or by microstructural changes resulting from holding at elevated temperatures for long periods of time (thermal aging).

High-temperature creep strength is an even more important for the turbine blade material. However, fatigue resistance (both high-cycle and low-cycle), tensile strength, and fracture toughness are also extremely important. As with the turbine shroud applications, neither gas-metal interactions nor thermal aging must result in the degradation of required properties.

Prime requisites for the turbine disk material are good fracture toughness and low crack growth rates. However, adequate creep resistance and tensile strength are also needed. A low coefficient of thermal expansion is also desirable so as to minimize the thermal contribution to stresses. And, of course, neither gas-metal interactions nor thermal aging should degrade the desired properties. In the turbine disk application, there is probably less concern with gas-metal interaction effects and greater concern with the effects of thermal aging.

Experimental PCS materials R&D plans

A brief summary of R&D plans and schedules for the NGNP PCS materials needed to meet the deployment time schedule is provided below. None of these activities other than assessments should be initiated until designs and materials candidates become reasonably firm. The schedule for these tasks is contingent upon funding availability.

Milestones

FY 2006

- Perform comprehensive review of the potential candidate alloys.
- Procure leading potential candidate materials
- Initiate mechanical and thermal-physical properties testing program of unaged materials
- Initiate aging of materials in helium

FY 2007

- Initiate fatigue, creep-fatigue, and fracture toughness testing
- Initiate creep and thermal-physical properties testing of aged materials
- Determine corrosion allowables for long-term helium exposure
- Complete selection of primary candidate materials
- Procure additional primary candidate materials

FY 2008 and 2009

- Initiate fatigue, creep-fatigue, and fracture toughness testing of aged materials
- Demonstrate formability and weldability of shroud collars
- Fabricate and initiate mechanical properties testing of shroud weldments
- Demonstrate castability of cast Ni-base candidates for turbine inlet shroud collars and turbine blades

FY 2010

- Complete materials testing programs

- Conduct commercial demonstration of the capability to provide turbine disk materials in the size and geometry required

3.1.2.6 High-Temperature Structural Design Technology

While not included explicitly with the research requirements for each individual components, time-dependent failure modes and time- and rate-dependent deformation response to time-varying thermal and mechanical loadings will characterize the design of NGNP metallic components operating at high-temperatures. The primary role of the High-Temperature Structural Design Technology task, which is an integral and inseparable part of the overall NGNP materials program, is two-fold. First it will provide the data and models required by ASME Code [5] groups to formulate time-dependent failure criteria that will assure adequate life for components fabricated from the selected NGNP materials.[1] Second, it will provide the experimentally-based constitutive models that are the foundation of the inelastic design analyses specifically required by Subsection NH of Section III of the ASME Boiler and Pressure Vessel Code, which governs design of elevated-temperature Class 1 nuclear components. This task is thus a key part of the codification and utilization of the selected NGNP structural materials.

A secondary role of the task deals with regulatory acceptance. Safety assessments, required by NRC, will depend on time-dependent flaw growth and the resulting leak rates from postulated pressure-boundary breaks. This requires a flaw assessment procedure capable of reliably predicting crack-induced failures as well as the size and growth of the resulting opening in the pressure boundary. Identification of an overall proven procedure is a part of this task.

The challenges, requirements, activities, and ASME Code considerations for designing high-temperature NGNP components are described in the following sections.

Challenges and Requirements for High-Temperature Structural Design

High-temperature components respond to thermal and mechanical loadings inelastically. At the lower end of a material's useful elevated-temperature operating range, the inelastic response can usually be separated into time-independent plasticity and time-dependent creep. Each can exhibit complex, history-dependent hardening or softening, and the two types of response can interact with one another; i.e., prior plastic strains affect subsequent creep response, and vice versa. At higher temperatures, the distinction between rate-independent plasticity and time-dependent creep blurs for many materials (e.g., modified 9 Cr – 1 Mo steel, Grade 91, and Alloy 617), and the separation between behaviors is no longer valid. The response becomes very rate dependent and both strain and cyclic softening occur.

Now consider what this inelastic response implies for structural design. Figure 18(a) illustrates a simple example of a straight pipe containing a pressurized coolant that periodically undergoes a thermal transient to a lower temperature [Figure18(b)]. Point *a* represents the normal operating temperature, and point *b* is the temperature reached after the rapid transient. The coolant is then slowly returned to the operating temperature (point *c*), where it might remain for a relatively long period of time before the transient is repeated (point *d*). Figure 18(c) shows the predicted effect of such repeated transient loadings on the inner surface of the pipe. The circumferential, or hoop, stress vs circumferential strain history shown was actually predicted for a test article

[1] A clear distinction should be made between the development of criteria (e.g., the damage accumulation rule and multiaxial strength criterion needed to guard against creep rupture) and the design data needed to quantify the criteria (e.g., uniaxial creep-rupture data). The former are largely the purview of the High-Temperature Structural Design Technology task; the latter are the responsibility of the design data generation tasks.

that was subjected to a repeated thermal cycle as part of the liquid metal reactor (LMR) program. The predicted strain history agreed well with strain measurements. The following response occurs during the first cycle. The hot pipe is initially pressurized, and the hoop stress remains essentially constant with time to point *a*. Time-dependent creep occurs, so the strain increases until point *a* is reached. As the temperature drops from *a* to *b*, the hoop stress first increases as the inner surface of the pipe contracts, and, if the transient is severe enough, the inner surface yields in tension. But then as the outer surface begins to cool and contract, it drives the inner surface, which has expanded inelastically, into compression (point *b*). As the temperature is increased back to point *c*, the residual compressive stress is reduced somewhat, but it is still present at point *c*. During the relatively long operating period from *c* to *d*, the residual hoop stress relaxes from *c* to *d*, during which time creep damage is accumulated. The effects of additional thermal cycles are depicted in Figure 18(c). Figure 18(c) illustrates three key failure modes of concern in high-temperature structural design: (1) creep-rupture damage (accumulated during the long elevated-temperature operating periods), (2) creep-fatigue damage (accumulated as cyclic fatigue damage and creep-rupture damage interaction), and (3) inelastic ratcheting (the incremental accumulation of permanent strain with each loading cycle).

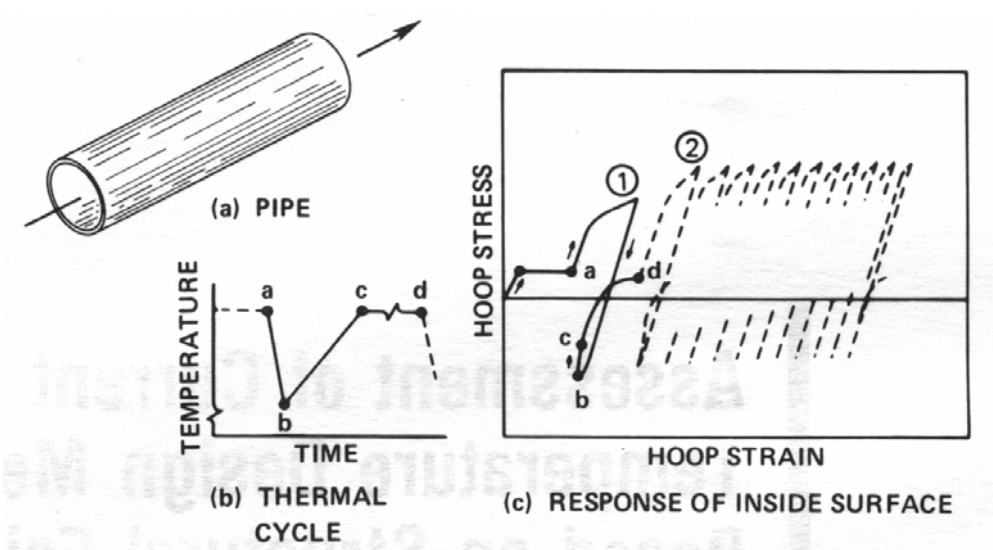

Fig. 18. Response of a pipe subjected to repeated high-temperature thermal transient loadings.

While the thermal transient example shown in Figure 18, is germane, particularly in liquid-metal reactor systems and supercritical steam systems [6][2] a similar response can occur whenever a component is subjected to a primary stress, due, for example, to internal pressure, and secondary and peak stresses due to geometric discontinuities or thermal gradients (spatial or temporal).[3] These secondary and peak stresses are cyclic in nature as the reactor may experience start-ups and shut-downs and other changes in operational levels. Each time the secondary and peak stress is cycled, the stress-strain state at each location in the component

undergoes a complex cycle involving plasticity and creep, or at higher temperatures, time-dependent viscoplastic behavior. The subsequent stress state during operation bears little

[2] The well publicized 316 stainless steel steam pipe failures that were discovered after almost 15 years of high-temperature operation in the Eddystone supercritical, coal-fired generating plant were attributed to creep-fatigue damage caused by repeated thermal transient loadings.
[3] Primary stresses are generally load controlled; secondary and peak stresses are deformation controlled.

resemblance to that envisaged for the primary pressure stress alone, and the accumulated cyclic strains can be considerably larger than those due to creep alone.

Early in the development of Subsection NH for Class 1 elevated-temperature nuclear components, it was recognized that without a reasonably accurate prediction of the complex, multiaxial time-dependent stress-strain behavior throughout a component, structural integrity could not be assured. This was especially true in light of the recognition that elevated-temperature failures are likely to occur at notch-like geometric discontinuities and at weldments (metallurgical discontinuities) where the material response is most complex. Subsection NH is thus predicated on the use of inelastic design analysis to accurately predict stress-strain-time response at critical component locations. Simplified procedures based on simplifying models of stress-strain behavior, are also provided, however, and these can often be used to avoid fully detailed inelastic analyses.

ASME Code Section III, Subsection NH and Associated Cases

The current Subsection NH criteria and material coverage originate largely from the LMR program of the late 1960s, ‘70s, and early ‘80s. In the late 1960s the Atomic Energy Commission initiated a Materials and Structures Technology program and simultaneously asked the ASME Boiler and Pressure Vessel Code Committee to charge an expanded Subgroup on Elevated Temperature Design with developing the design rules that eventually provided the basis for Subsection NH. That Subgroup was staffed largely with LMR program participants. A High-Temperature Structural Design Technology task within the nationwide Materials and Structures Technology program supported the development and experimental confirmation of design criteria to guard against creep, creep-fatigue, and ratcheting failures. The Mechanical Properties Design Data task provided the uniaxial data for design and quantification of the criteria. In companion efforts, the High-Temperature Structural Design Technology task provided simplified methods and recommended constitutive equations for inelastic design analyses, and the Design Data task provided the uniaxial stress-strain and creep data needed for designers to implement the equations. All of this work was based on experimental data from common heats of materials, so that the resulting design methods, criteria, and data were as consistent as possible. An Argonne National Laboratory report, prepared for the Nuclear Regulatory Commission (NRC) provides a good overview of Subsection NH and its associated cases and their shortcomings for HTGR components [7].

The design rules of Subsection NH for Class 1 elevated-temperature components consist of: (1) load-controlled (primary) stress limits, and (2) strain, deformation, and fatigue limits (Appendix T in NH). The load-controlled stress limits are in the form of time-dependent allowable stresses based on both short-time tensile test results and long-term creep test results. Allowable stress reduction factors for weldments are given, as are reduction factors to account for the degrading effects of prior service. Only elastic analysis results are required to satisfy the primary stress limits. The second category of design rules – strain, deformation, and fatigue limits – are much more problematic. These rules deal with the complex behavior, described in the previous section, resulting from primary plus cyclic secondary and peak stresses. They are aimed at

preventing failures due to excessive deformation, creep-fatigue damage, and inelastic buckling, and they require inelastic design analysis results or, in some cases, simplified procedures for

their satisfaction. The rules[4] include strain accumulation limits, creep-fatigue criteria, buckling limits, and special limits for welds.

The materials that are currently covered, allowable life times, and maximum allowable temperatures are limited in Subsection NH as shown in Table 13. Comparison of temperatures in Table 13 with the anticipated upper Generation IV reactor system temperatures in Table 44 in Section 4.4 of this report indicates that the current Code coverage is inadequate for the NGNP, GFR, and LFR (long-term version) components. For example, when temperatures during abnormal events are considered, only the temperature limits for Alloy 800H come close to those required for the NGNP vessels. Coverage is inadequate for use of all materials for use in the very-high-temperature NGNP components.

Table 13. Current subsection NH materials and maximum allowable times and temperatures.

Material	Temperature (°C)	
	Primary stress limits and ratcheting rules[a]	Fatigue curves
304 stainless steel	816	704
316 stainless steel	816	704
2 1/4 Cr – 1 Mo steel	593[b]	593
Alloy 800 H	760	760
Modified 9 Cr – 1 Mo steel (Grade 91)[c]	593[b]	538

[a] Allowable stresses extend to 300,000 h (34 years) unless otherwise noted.
[b] Temperatures up to 649°C are allowed for up to 1000 h.
[c] Modified 9 Cr – 1 Mo steel has been approved for Subsection NH but has not yet been included.

Aside from the fact that many preliminary candidate Generation IV materials are not included in Subsection NH, there are several generic shortcomings that will require resolution.

1) The maximum temperatures permitted will have to be significantly increased.
2) Allowable time-dependent stresses will have to be extended beyond the current 300,000 h maximum to 600,000 h
3) Environmental effects (e.g., impure helium in the case of NGNP) need to be incorporated into the failure criteria, particularly creep-fatigue.
4) Finally, Code developers and researchers worldwide generally recognize that the current linear damage accumulation rule for creep-fatigue has significant shortcomings, particularly at higher temperatures and longer times. Various improvements, such as those based on ductility exhaustion and damage rate concepts, have been proposed, but none have been backed by sufficient R&D to allow their adoption as a replacement for linear damage in Subsection NH. These several shortcomings should be remedied for Generation IV systems.

[4] As currently formulated in Subsection NH, the creep-fatigue rules are based on a linear damage accumulation rule, an interaction diagram to account for the synergistic effects (and for environmental effects in the case of ferritic steels), and multiaxial strength theories for both fatigue and creep rupture.

Two other significant generic shortcomings in the high-temperature structural design methodology were identified in the licensing process for the Clinch River Breeder Reactor Plant (CRBRP) and will likewise have to be addressed for Generation IV systems [8]. They were:

1) weldments, and
2) notches.

Most high-temperature structural failures occur at weldments. Welded pipe, for example, has failed in high-temperature fossil plants after many years of operation. Reliably guarding against weldment failures is particularly challenging at high-temperatures, where variations in inelastic response of the constituent parts of the weldment (i.e., weld metal, heat-affected zone, and base metal) can result in a strong metallurgical discontinuity. In the hearings for a construction permit for CRBRP, early weldment cracking was identified by NRC as the foremost structural integrity concern. It was felt that designers should have a better understanding of the metallurgical interactions that take place in weldments and their effects on weldment life. The CRBRP project committed to a five-year development program to address these issues prior to issuance of a plant operating license. The program was never carried out because of the subsequent demise of the project. Since the issues will almost certainly resurface with Generation IV reactors, they will need to be addressed within the High-Temperature Structural Design Technology task and the Mechanical Properties Design Data task.

Like metallurgical discontinuities, geometric discontinuities (i.e., notches and other local structural discontinuities) are sources of component failure initiation. The adequacy of the methodology to handle such discontinuities is a reliability and licensing issue, particularly when heat-to-heat variability, strain hardening/softening, and cyclic loadings are considered. This was the second unresolved issue (after weldments) in the CRBRP licensing hearings, and again a development program was required by NRC. Reviewers felt that the effects of stress gradients were not reflected in creep-fatigue design limits and that general notch weakening and loss of ductility under long-term cyclic loadings were not well understood. Notches will receive particular attention in the development of the required high-temperature structural design technology for Generation IV reactor systems.

Four current Code cases and a draft Code case are relevant. Case N-499 was developed for HTGRs. N-499 permits Class 1 components fabricated from SA-533, Grade B steel to exceed the normal 371°C low-temperature design limit for short periods for Levels B, C, and D events. A similar case might be developed for the gas-cooled reactor vessel materials under off-normal conditions. Case N-201 provides rules for construction of core support structures made of ferritic steels, austenitic stainless steels, and high-nickel alloys, for which metal temperatures do not exceed those in Section II, Part D, of the ASME Code. This Case, with modifications, might be useful for the metallic core internals of Generation IV systems. The basis for the Case is the same high-temperature structural design methodology as that on which Subsection NH is based. Code case N-253 provides rules for Class 2 and 3 components for elevated temperature service. Unless exemption rules are met, the case essentially defaults to the criteria of Subsection NH. Code case N-290, which covers expansion joints in Class 1 liquid-metal piping and is based on design by test verification, might have application to bellows used in Generation IV systems. The Japanese have developed design by analysis procedures that would replace some of the more onerous aspects of N-290 [9].

A draft Code case developed in the 1980s for design of nickel-base Alloy 617 components to 982°C is directly pertinent to NGNP and other Generation IV systems with very-high-temperature components [10]. The original request for the case came from DOE and General Electric. The specific VHTR component of primary interest was a steam-methane reformer which was to be part of the reactor primary pressure boundary. Materials of potential interest included nickel-base alloys 800H, X, and 617. Alloy 617 was chosen for the case because it was a leading choice of designers, and a reasonable database of material properties existed. The case was developed by an ad hoc group of the Code Subgroup on Elevated Temperatures Design (SG-ETD). The case was subsequently approved by SG-ETD and submitted to its parent group, the Subcommittee on Design, for approval. However, further action on the case was suspended when the DOE project was canceled.

The case, of considerable value to Generation IV, can serve as a springboard for establishing very-high-temperature component Code rules. It was the result of a five-year effort of experienced high-temperature materials and structures engineers, as well as gas-cooled reactor project participants. Participation and input of researchers from JAERI in Japan and Jülich in Germany was received as well. The draft case, while having the same framework as Subsection NH, has several unique features that are ramifications of the very-high-temperature material behavior. This behavior includes:

1) the lack of clear distinction between time-independent and time-dependent behavior,
2) the high dependence of flow stress on strain rate, and
3) softening with time, temperature and strain.

Therefore, the design rules of Subsection NH that are based on the separation of time- and rate-independent response, or on strain-hardening idealizations of material behavior, required careful reconsideration in the case. For example, the case specifies that inelastic design analyses for temperatures above 649°C must be based on unified constitutive equations, which do not distinguish between time-independent plasticity and time-dependent creep.[5] The draft case also recognizes that significant environmental effects on Alloy 617 could exist and recognizes that extended exposure at elevated temperature may cause a significant reduction in fracture toughness of Alloy 617, thus introducing an additional failure mode – brittle fracture – requiring consideration. Finally, because of the uncertainties in data extrapolation and the lack of experience in designing to such high temperatures, where allowable stresses are very low, the draft case is limited to design lives of just 100,000 h or less. This is less than 1/5th of the design life goal for Gen IV reactor designs.

In addition to inheriting the known shortcomings of Subsection NH, the draft case has a number of gaps and shortcomings that would have to be overcome before it could be satisfactorily and reliably applied. These were identified as the case was being developed, and they are tabulated below because of their relevance to this plan.

- Actions Required to Complete Case
  - Alloy 617 must be added to the low-temperature rules of Section III.
  - Weldment stress rupture factors must be added.
  - Thermal expansion coefficients must be added.
  - Additional isochronous stress-strain curves, covering temperatures below 649°C and above 950°C, must be added.
- Material Data Needs
  - Weldment fatigue data are needed.

- A more complete creep-fatigue database must be developed.

[5] This will also be the case for the high-alloy ferritics (e.g., 9 Cr – 1 Mo steel) at the upper end of their useful temperature range.

- The synergistic effects of aging, environment, loading, and temperature should be better understood.
- The effects of aging on toughness must be characterized.

- Structural Design Technology Needs
  - An experimentally validated constitutive model must be developed.
  - Some very-high-temperature, time-dependent tests of simple Alloy 617 structural models are needed to (1) provide a better understanding of structural behavior and failure modes, (2) validate inelastic analysis methods, and (3) provide application feedback for the case.
  - Simplified ratcheting evaluation procedures need to be developed for temperatures above 649°C.
  - The use of linear damage fractions as the basis of creep-fatigue rules is probably the biggest shortcoming of the draft case. A basic effort is needed to identify and experimentally validate a more suitable damage theory.

Since development of the draft case, much more applicable data on Alloy 617 were generated in Germany [11]. Also, improved restricted-chemistry versions of Alloy 617 are being pursued, which may have improved strength at temperatures somewhat lower than 950 to 1000°C.

NGNP Requirements

The deliverables in the early portions of the High-Temperature Structural Design Technology task are keyed to the projected NGNP schedule and the assumed materials selection dates, as listed below:

- 2008 – complete preconceptual design (select three candidate materials per component),
- 2009 – complete conceptual design (narrow material candidates to two per component),
- 2010 – complete preliminary design,
- 2012 – complete final design (down select to final material for each component), and
- 2019 – complete reactor construction.

This means that prior to the completion of preliminary design in 2010, sufficient data must be collected on each pair of component materials to allow a first cut at design criteria and allowables. Simplified screening criteria are needed even in the conceptual design phases. The feasibility of the design and the likely adequacy of the two materials (617 and 9Cr – 1Mo) will be established by the preliminary design effort. By the beginning of final design, draft Code rules and allowables must be available for each of the two materials selected per component. Soon thereafter, the Code development must focus on the final chosen material for each component, and the High-Temperature Structural Design Technology task must focus on supporting that effort and resolving application and licensing issues.

Reflecting the scope of the overall materials program, the High-Temperature Structural Design Technology task will have two thrusts: (1) medium-high-temperature pressure boundary metals

(e.g., pressure vessels) and (2) metals for very-high-temperature components. The pressure vessels will certainly be designed to Subsection NH. The very-high temperature components may be in the form of liners in piping and in the intermediate heat exchanger (IHX)—Reference 12 describes the kind of innovative approaches used in the Japanese High-Temperature Engineering Test Reactor (HTTR) to separate the heat-resistance function from the pressure-retaining function and to minimize stresses due to thermal expansion. While not strictly pressure boundaries, these very-high-temperature components will likely be designed at least to the intent of Subsection NH, since NRC will probably consider a failure of these components to be an accident precursor. For purposes of this plan it is assumed that both pressure boundary and very-high-temperature materials will be included in the rules of Subsection NH or their associated Code cases.

The governing NGNP operating temperatures are assumed to be 490°C for pressure boundary materials and 1000°C for the very-high-temperature components. During off-normal events, peak temperatures in the pressure vessels could exceed 610°C (mid-wall temperature), and in the very-high-temperature components they could reach 1200° to 1300°C. These, then, are the target temperatures for initial Code rules and allowables.

The most promising candidate materials for the pressure boundary components are the higher-alloy 9 Cr and 12 Cr steels. Even though modified 9 Cr – 1 Mo (Grade 91) will likely not be adequate for the above NGNP temperatures and times involved, more suitable variants (e.g., Grade 92) are particularly attractive. Their basic characteristics and behavior are similar to those of Grade 91, so the rules and procedures for Grade 91 already approved for Subsection NH would serve as a starting point (although even those rules need to be subjected to structural test verification prior to Generation IV application).

For very-high-temperature components, the most likely material candidates are:

- Variants or restricted chemistry versions of Alloy 617,
- Variants of Alloy 800H, and
- Hastelloy X and XR.

Of these, Alloy 617 has the significant advantage in the United States of having gone through Code deliberations that culminated in the draft Code case, and the body of experts that developed the case simultaneously identified what must be done before the Code case could be reliably applied. Alloy 800H is in Subsection NH, although at considerably lower temperatures. Hastelloy XR has a significant database and body of experience in Japan [13].

While the initial thrust of the High-Temperature Structural Design Technology task is focused on NGNP requirements, the results will apply as well to the other Generation IV reactor concepts. Modified 9 Cr-1 Mo steel, for example, is a candidate structural material for all four Generation IV reactor systems considered here. Nickel-base alloys, including 617, are candidates for very-high-temperature components in each concept except SCWR. As GFR, SCWR, and LFR requirements become better defined, the parameters and common materials covered by the High-Temperature Structural Design Technology task will be expanded to include them.

Scope and Schedule

The following overall strategy will be used to establish the required high-temperature structural design technology, consisting of unified constitutive equations for design analyses, design criteria (creep-fatigue, etc.), and simplified method and criteria. Because of the extremely short time available, immediate attention will be focused on (1) developing simplified criteria which can be used in rapid feasibility assessments of the structural viability of very-high-temperature components in conceptual and early preliminary design phases, (2) completing work on the draft Code case for Alloy 617, or a variant thereof, for very-high-temperature components, and (3) verifying, through confirmatory structural tests, the validity of the current criteria, inelastic analysis methods, and simplified methods for modified 9Cr-1Mo steel (Grade 91), and adapting, if necessary, the criteria and design methods for Grade 91 to cover Grade 92 for pressure boundary components at higher temperatures. While the above two materials are leading contenders for use in NGNP and other Generation IV systems, even if they are not chosen their early consideration will allow the design methodology development to build on the considerable previous experience and provide a framework for including subsequent material candidates. The effort will be expanded as material down-selection occurs.

Much of this effort provides required technological support and recommendations to the ASME Code Subgroup on Elevated Temperature Design, which is the group responsible for the development of the Subsection NH rules and for approving new materials into the Subsection. To that extent, the pace and direction of the activities will be dictated by the deliberations and decisions of the Subgroup. An imperative requirement is that key participants in the High-Temperature Structural Design Technology Development task, as well as those in the materials data tasks and knowledgeable representatives from design organizations, be actively involved in the Subgroup on Elevated Temperature Design. Also, a High-Temperature Structural Design Technology Coordinating Committee, chartered by DOE, is proposed. In addition to a representative from DOE, this committee would have materials and structures participants from national labs, Code group representatives, and participants from design organizations. The role of the committee would be to

- identify needs based on a consideration of components, temperatures, loading conditions, and materials of key interest,
- establish priorities,
- assure proper coordination between high-temperature structural design technology development, Code activities, and the supporting materials tasks, and
- review progress and convey results to the design organizations in a timely manner.

A guiding principle of the High-Temperature Structural Design Technology task will be to meet the needs of designers as required in the preconceptual, conceptual, preliminary, and final stages of design. This means that in addition to the development of an experimentally verified technology as an end product, interim needs for structural design guidance, methods, and criteria will be met on a continuing basis.

The planned High-Temperature Structural Design Technology task activities are outlined in the following subsections. The timing of the various activities reflects their interdependencies, the effort required, and the overall NGNP tentative schedule.

Detailed Planning

Initial efforts on this task began in FY-04, with two thrusts. The first was more detailed program planning, based on preliminary literature reviews and discussions with key individuals active in the development and application of high-temperature design methods. The second focused on the development of simplified criteria that can be used in rapid feasibility assessments of the structural viability of very-high-temperature components in conceptual and preliminary design phases.

Efforts in FY-05 will focus on the following:

- A more detailed review of German data and criteria development for Alloy 617, Japanese data and criteria for Hastelloy XR, as well as U.S. and international developments related to very-high-temperature component design;
- Request, through DOE and the project that active work on the draft Alloy 617 Code case be reinitiated within the Code groups;
- Continue the development and evaluation of simplified methods for very-high-temperature design, building on the criteria and methods formulated in FY-04;
- Initiate creep-fatigue and basic scoping tests on Alloy 617 in support of the simplified methods development effort;
- Initiate exploratory deformation tests in support of the development and evaluation of unified constitutive theories for detailed inelastic design analyses of Alloy 617 components; incorporate existing theories into structural analysis computer programs for evaluation; identify the most promising theory.

The focus in FY-05 is solely on Alloy 617 and very-high-temperature structural design. Activities addressing modified 9 Cr-1 Mo steel will be added in FY-06. In addition to activities to confirm detailed design methods and simplified methods for modified 9 Cr-1 Mo steel, recognized uncertainties with the methodology, such as notch behavior and weldments, will be initially addressed using modified 9Cr-1Mo steel as the reference material. Efforts will also be initiated to extend the methods and criteria for modified 9 Cr-1 Mo steel to higher temperatures if that need is confirmed by evolving reactor designs.

Inelastic Design Analysis Methods

Constitutive models, or equations, are the key ingredients of the inelastic design analyses that are required by Subsection NH. These equations describe the inelastic, multiaxial flow response of a material to complex time-varying, multiaxial, loadings. Their development must be based on results of a body of exploratory experimental uniaxial and multiaxial tests in which specimens are subjected to a variety of relevant thermal and mechanical loading histories. These exploratory tests reveal key behavioral features (e.g., flow, hardening, softening, path dependency, etc) that must be adequately reflected in the resulting constitutive theory. Ultimately the adequacy of the constitutive equations must be demonstrated by incorporating them into inelastic structural analysis computer programs and benchmarking the resulting predictions against the results of pertinent high-temperature structural tests. The combination of constitutive models, structural analysis procedures, and design criterion must reliably provide a suitable margin against structural failure.

Experimentally based constitutive equations must be developed for each pair of NGNP materials as well as for other identified Generation IV component materials. It is anticipated that the materials addressed will be common to more than one reactor system. Clearly the constitutive equation development effort must be carried out in close coordination with the

materials data tasks, since they provide the design data for the final quantification of the models.

Initially, the development effort will focus on Alloy 617 at temperatures to 1000°C. At least four proposed unified constructive models are known to exist for Alloy 617. One of these is a tentative model, based on minimal data, that was developed at ORNL to help guide the development of the draft Code case [10]. That model, or one of the others, will be further developed, beginning in FY-05, on the basis of results from a more extensive and focused test program. As a first step, the model will be incorporated into a suitable structural analysis program so that predictions can be evaluated for a variety of thermal and mechanical load histories, multiaxial load paths, and simple structural features. In FY-06, modified 9 Cr – 1 Mo steel (Grade 91 or 92) will be added to the development effort. Here again, a starting point already exists. Development of a tentative unified constitutive model for Grade 91 was carried out jointly with the Japan Atomic Power Company. In addition to monotonic and cyclic stress-strain test and creep test results, on which the model was based, predictions of the model were compared with the results of so-called "two-bar ratcheting" tests. Deficiencies were identified from these comparisons, and the need for special uniaxial and biaxial tests was noted. Also, structural tests were recommended to be performed against which inelastic analysis predictions could be benchmarked. None of this testing was ever carried out because of the demise of the liquid-metal reactor program.

While every effort will be made to utilize information from the data generation tasks and from the literature, experience shows that an extensive test program of uniaxial and biaxial exploratory tests will be required to establish key response features resulting from various mechanical and thermal load histories, and biaxial loading paths. Establishing test matrices for such tests a priori is not easy; tests must be planned and carried out in concert with model development efforts, and subsequent tests depend on the findings from the previous tests.

The exploratory deformation tests being discussed are very demanding in terms of test equipment, since they involve precise control of load history and conditions. Often potential surfaces, (akin to yield surfaces or loading surfaces in classical plasticity) must be established in biaxial stress space. One example of this in past unified equation development efforts was the determination of surfaces of constant inelastic strain rate. In addition to uniaxial specimens, thin-walled tubular specimens subjected to combined internal pressure, axial loading, and torsional loading will be employed. This will require that suitable test facilities, controllers, and extensometry be designed, procured, and built.

When the selected pair of structural materials for each NGNP component becomes known in FY-07, the constitutive equation development effort will transition to them. Two of the materials will likely be in the two classes discussed above, so that the earlier efforts will be applicable. Interim constitutive models will be provided for 9 Cr, Grade 92 steel and Alloy 617 in FY-07. Equations for the pairs of pressure boundary and very-high-temperature component materials will be provided in FY-09 in time for final design use. One more iteration on the equations for the final NGNP materials will be issued early in the final design phase. This final iteration will correct shortcomings identified from the results of structural tests and from design analysis experience. Constitutive equation development efforts for other common Generation IV component materials will be incorporated into the task as those materials are identified. The modified 9 Cr – 1 Mo steel and Alloy 617 frameworks will again be used as springboards.

As mentioned earlier, an integral part of constitutive equation development, particularly in the case of unified theories, which can result in stiff equations that can be difficult to integrate, is the

incorporation of the models into computational tools for parameter studies, behavioral predictions, and analyses of structural tests. A finite element program that provides assess to the constitutive modeling subroutines will be used for this purpose. Ultimately, the subtask will work with finite element experts to assure that the needed equations are correctly incorporated into the computer programs to be used for Generation IV component design analyses.

Failure Models for Design Criteria

This task—the development of experimentally-based criteria to guard against failures in Generation IV components—is at the center of the high-temperature structural design technology. The key failure modes of concern are creep rupture, which can result from long-term loads, and creep-fatigue, which can lead to cracking and failure in areas of high cyclic secondary plus peek stresses. Of these two failure modes, creep-fatigue is the dominant concern, for several reasons. First, past high-temperature design activities and operating experience has shown creep-fatigue damage to most often be the life-limiting factor in a high-temperature component. Second, data are too limited at the upper end of the useful temperature range of the candidate Generation IV materials to quantitatively establish the limits of the synergistic interaction of creep and fatigue damage. And third, the methodology used in the Code to limit creep-fatigue damage has significant shortcomings that have necessitated the use of large safety factors. A major concern is that at very high temperatures these safety factors could become untenable unless improvements in the basic failure models are developed.

Failure criteria normally consist of two components: (1) a damage accumulation model describing failure resulting from the accumulation of damage under varying thermal and uniaxial mechanical loadings, and (2) a strength criterion relating failures under multiaxial stresses to uniaxial failure data. At the relatively low-temperatures presently covered by Subsection NH, the all-important area of creep-fatigue failures is handled by separating damage into creep and fatigue components and providing an interaction diagram for the sum of the two. Creep damage is characterized by time fractions, and fatigue, by cycle fractions. Von Mises equivalent strain is used for the fatigue strength theory; a special equivalent stress quantity, which must be quantified for each material on the basis of multiaxial creep-rupture test results, is used for the creep-rupture strength theory. Thus, both uniaxial tests, focusing on damage accumulation, and biaxial tests, focusing on the strength criteria are required for each material.

This effort will begin in FY-05 with emphasis on creep-fatigue damage accumulation in Alloy 617 at the upper end of the projected Generation IV use temperatures. While several test programs, including those associated with the German HTGR [14-15], and an early DOE-sponsored HTGR effort [16] have addressed creep-fatigue of Alloy 617 at temperatures to 950°C, the data are very limited, particularly in terms of hold-time duration. The latter is important because no saturation of creep damage has been observed to date.[6] The emphasis in FY-05 will be on the generation of data supporting the development of interim simplified criteria. A more general approach to creep fatigue will be initiated in FY-06. Also, in parallel with the constitutive equation development effort, modified 9 Cr - 1 Mo steel (Grade 92) will be brought into the creep-fatigue testing effort in FY-06. Note that creep-rupture damage accumulation is a subset of creep-fatigue. Biaxial creep-rupture and time-dependent fatigue testing will be initiated on the two materials—Alloy 617 and modified 9 Cr – 1 Mo steel—in FY-07. Models and criteria

developed for these two materials can later be adapted to other candidate structural materials identified for NGNP and to other Generation IV structural materials.

A key goal of this task activity is to develop, if possible, an alternative to the linear damage creep-fatigue summation rule currently in Subsection NH. Damage models that have been proposed and studied in the past include ductility exhaustion, damage rate, and strain-range

[6] Normally in a structural situation and in a strain-hold creep-fatigue test, one would expect the stress to relax down to a point where no further creep damage occurs. That has not been observed for Allow 617. The longer the hold time, the greater the reduction in time-dependent fatigue life. This has ramifications for simplified design criteria.

partitioning. Their proponents have reported improvements for each over linear damage. Lack of adequate data or perceived calculational difficulties have precluded the replacement of linear damage by any of these alternatives. To the extent possible, this subtask will take a new fundamental approach to the problem. Exploratory tests will focus on understanding the damage mechanisms, which will include environmental effects unique to each reactor type (impure helium for NGNP). Damage will be related to calculable quantities. Others have attempted this in the past, even using real-time microscopy capability to support the effort, without much success. The Generation IV program offers a unique need and opportunity to make a significant improvement. The challenge will be to pursue that long-range goal while at the same time, providing the extensive database required to adapt linear damage for interim applications. This will require a concerted effort between the materials tasks, including creep-fatigue testing at INEL, and the High-Temperature Structural Design Technology task. A joint plan of attack should be developed, preferably under the auspices of the proposed High-Temperature Structural Design Technology Coordinating Committee.

An alternative to revamping the creep-fatigue criteria would be to isolate a few critical and representative design issues, perform representative structural tests, correlate the test results with whatever methodology that seems to best fit the unique circumstances, and then extrapolating to the actual design life and loading conditions. Extrapolation without a complete understanding of the mechanisms governing failure for use of very high temperature components for 60 years is very dangerous. This approach can only be attempted later in the program, since it depends on having a fairly well established design.

This subtask activity is the place, along with the confirmatory structural tests and analyses, where the two generic technology concerns—weldments and notch-like geometric discontinuities—are addressed. Weldment and weld metal testing must be included in the planned creep-rupture and creep-fatigue test program. This requires that each candidate weld process and weld filler metal for each base metal be considered. Likewise, a systematic test program to address notches will be required. Much of this latter testing will be carried out on modified 9 Cr – 1 Mo steel as the reference material; early testing will be on 617. Reduced test programs can hopefully be employed to extend the results to other materials.

Simplified Methods and Criteria

While the underlying premise of Subsection NH is that the variation of stresses and strains with time in a high-temperature component should be predicted by detailed inelastic design analyses, the wide use of such analyses for preliminary design and for every region and loading condition of a component would prove impracticable. Thus, simplified rules for satisfying the strain limits (ratcheting) and creep-fatigue criteria were developed and are provided in Subsection NH. Those simplified methods, which are generally more conservative than would be an evaluation based on detailed inelastic analysis, are based on simplifying descriptions of

the inelastic material behavior. Unfortunately, as temperatures increase and material behavior becomes more rate- and time-dependent, the bases for the current simplified methods become more tenuous. This was recognized in the draft Alloy 617 Code case where application of the simplified ratcheting rules was limited to temperatures of 649°C and below.

In the case of NGNP, the need for simplified criteria is critical. The materials data and models for establishing the criteria needed for Subsection NH and the inelastic analysis methods needed to satisfy them do not yet exist for Alloy 617, nor for modified 9 Cr – 1 Mo steel at its upper use temperature. Yet, preconceptual design, conceptual design, and preliminary design are scheduled for completion during the next three years, and interim guidance is required for design activities to proceed. To meet this need, an effort was carried out in FY-04 to provide simplified criteria that can be used in rapid feasibility assessments of the structural viability of very-high-temperature components in the conceptual and early preliminary design phases. These simplified criteria are for design guidance and are not necessarily in rigorous compliance with Subsection NH methodology. Rather, the objective was for criteria that address the early NGNP design needs and which, if satisfied, will lead to a reasonable assurance that when more rigorous criteria are incorporated into NH, the components evaluated in accordance with this simplified approach will also satisfy the subsequent more rigorous criteria without significant over-conservatism. These interim criteria, which cover Alloy 617, have S_{mt} (time-dependent allowable stress) curves to 60 years for evaluating primary stresses and fatigue curves for use with elastic analysis that have a bounding estimate of creep damage and elastic-follow-up effects incorporated into them.

In the longer term, creep-fatigue data will lead to a better representation of creep damage effects. Several different approaches might be used to account for the variable stress-strain path during hold periods: (1) a variation of the current Subsection NH elastic analysis approach, (2) an estimation scheme recently proposed by Shimakawa, et al, [17] (3) Jetter's proposed "Simplified Model Test" (SMT) [12][7] approach, [18] and (4) the use of isochronous stress-strain curves. Each of these will be pursued.

One goal of the simplified methods development effort will be to eliminate the need to classify stresses into primary, secondary, and peak. The present core stress concepts in Subsection NH for satisfying strain limits will be reexamined with the goal of eliminating the need to identify primary and secondary stresses. Reference stress concepts also show promise for simplified methods and will be examined.

Further development of simplified methods will focus initial on Alloy 617 at very high temperatures and, to a lesser extent, on modified 9 Cr – 1 Mo steel at moderate temperatures. The methods developed will be extended to other Generation IV component materials as they are identified.

The guiding principle for the development of improved simplified methods is that they be consistent with emerging criteria based on detailed inelastic design analysis methods. No component should pass a simplified criteria that would be rejected by the more detailed criteria and inelastic design analysis route. The validation of both will be based on comparisons with structural test results, as described in the next subsection.

Exemption rules are a form of simplified methods that are also covered in this subtask. They may exempt a component or loading from high-temperature evaluation if, for example, certain time-temperature limits are satisfied or if the number of cyclic loadings is limited. Exemption rules are used in both Code cases N-201 and N-253. Their appropriateness for Generation IV

components will have to be evaluated with the Code Subgroup on Elevated Temperature Structural Design. Where exemption rules are appropriate, their development can draw on the body of information generated in the High-Temperature Structural Design Technology task and the associated mechanical property tasks.

[7] The SMT approach uses a special creep-fatigue specimen to include elastic follow-up effects in the creep-fatigue data. These tests are considered in the basic structural tests.

Confirmatory Structural Tests and Analyses

Confirmatory time-dependent structural tests have, in the case of most of the current Subsection NH materials and design methodology, provided data that either (1) validated the high-temperature design methodology (inelastic design analysis methods and criteria) or (2) led to changes in inelastic design analysis guidelines or Code rules. The role of structural tests will be even more important for new NGNP structural materials because of the lack of long-term service experience. This need was recognized by the developers of the draft Alloy 617 Code case. The need for very-high-temperature, time-dependent tests of Alloy 617 structural models was identified to (1) provide a better understanding of structural behavior and failure modes, (2) validate inelastic analysis methods, and (3) provide some applications feedback to the Code. Even in the case of modified 9 C r – 1 Mo steel, applicable experience is limited, and while structural tests were planned under the liquid-metal reactor program, they were never carried out. The focus of the structural test effort will initially be on Alloy 617 and modified 9 Cr – 1 Mo steel. Focus will then shift to other NGNP pressure boundary materials and very-high-temperature component materials as they are selected. Other Generation IV materials will be addressed as they are identified in related activities for other reactor systems or in crosscutting activities.

One should note that the structural tests to be performed under this subtask are not tests of NGNP component structures. Rather, they are tests of carefully chosen, simple, but representative, geometrical and metallurgical features subjected to time-varying, and cyclic thermal and mechanical loadings. The tests will be contrived to explore key features or problem areas of the methodology and to validate inelastic design analysis (constitutive equations), failure criteria, and, where applicable, simplified methods and criteria. Key aspects to be examined include notches and other discontinuities, weldments, and elastic follow-up.

Three types of structural tests, and associated analyses, were successfully employed in developing and validating methods and criteria for the liquid-metal reactor, and tests, usually to failure, of these same types are envisioned for Generation IV reactors. In all cases the structures are two-dimensional, i.e., their analysis requires only plane or axisymetric structural analysis programs (typically finite-element analysis). The three types of tests and likely examples of each are tabulated below.

- Basic structures
  - Axially-loaded notched bars and bars with a step change in diameter (e.g., to generate data for the SMT method)
  - axially-loaded flat plates with holes, axial/transverse welds
  - Two-bar shakedown and ratcheting tests
  - pressurized tubes with step changes in wall thickness, built-in ends
- Simple structures

- beams in bending
- pressurized cylindrical shells with heads
- thick cylinders subjected to cyclic radial thermal gradients and axial loads on internal pressure

• Component configurations
- nozzle to spherical shell with internal pressure

Experience has shown that with these tests most of the key behavioral features exhibited by actual systems and components can be modeled and evaluated. The resulting data will provide a check of the most important features of the methods and criteria.
As in the other subtasks, the initial tests, to begin in FY-06, will be on Alloy 617 models. Modified 9 Cr – 1 Mo steel testing will also begin in FY-06, and structural tests of other Generation IV component materials will be carried out in subsequent years, as the materials are identified.

The early structural tests will be of the basic type. These tests can be carried out in standard hydraulic test machines or in simple bench top setups requiring only a pressure source and furnace. Many of the basic problem areas associated with notches, weldments, and questions of follow-up can be addressed just on the basis of these tests. Tests of more complicated geometrics and loadings (simple structures and component tests) will require development of test facilities, and these will be carried out in later years.

In all cases, a two-dimensional inelastic structural analysis program must be available for predicting deformation and failure (initial cracking). As previously noted, a suitable program will be identified in FY-05.

Safety/Reliability Assessments

While not strictly a part of the design methodology, the safety assessments required for licensing depend on much of the same materials and structures database. A particular need is for a flaw assessment procedure capable of reliably predicting crack-induced failures as well as the size and growth of the resulting opening in the pressure boundary. High-temperature flaw assessment guides have been developed in France, Japan, and the United Kingdom, and work on elements of a procedure is currently underway in the United States under Pressure Vessel Research Council sponsorship. An overall proven procedure, which will require inelastic analysis of flawed components, characterization of subcritical creep and fatigue crack growth, and a structural failure criterion, does not exist however. These will be developed for the Generation IV materials.

Resolution of Identified Shortcomings, Issues, and Regulatory Concerns

Experience has shown that once detailed design assessments are undertaken, shortcomings and issues with the design methodology and criteria will arise, requiring additional R&D for their resolution. In addition, the licensing process will likely result in the identification of further R&D requirements, as it did in the case of the CRBRP project. Thus, it is anticipated that the High-Temperature Structural Design Technology development project will continue through the FY-12 to FY-15 timeframe to resolve the shortcomings, issues, and regulatory concerns that are identified relative to NGNP and other Generation IV concepts.

KEY MILESTONES

Key milestones for the High-Temperature Structural Design Technology development task are listed below.

- FY-05
  - Coordinate, through DOE and a design organization, an official request to the ASME Boiler and Pressure Vessel Code to revitalize consideration of the draft Alloy 617 Code case.
  - Foster the chartering, by DOE, of a High Temperature Structural Design Technology Coordinating Committee.
  - Conduct selected creep-fatigue and basic structural tests of Alloy 617 near the upper temperature range of the material (~950°C) in support of the proposed simplified structural design criteria and the elastic follow-up assumptions made therein.
  - Initiate analytical and experimental study to improve Alloy 617 constitutive model near the upper temperature range of the material (~950°C); incorporate model into appropriate inelastic analysis two-dimensional computer program.
- FY-06
  - Initiate exploratory deformation studies, creep-fatigue testing, and basic structural tests for modified 9 Cr – 1 Mo steel, Grade 92, at its upper use temperature.
  - Make improvements to constitutive model for modified 9 Cr – 1 Mo steel; incorporate model into structural analysis program.
  - Complete facilities for simple structural tests and initiate tests on Alloy 617 and modified 9 Cr – 1 Mo steel.
- FY-07
  - Provide interim constitutive equations for 9 Cr – 1 Mo, Grade 92 steel and Alloy 617 to aid in Code development and design studies. Develop isochronous curves using the equations.
  - Transition constitutive equation development to the selected pairs of NGNP pressure boundary materials and NGNP very-high-temperature component materials.
- FY-08
  - Initiate constitutive equation development activities for other key common Generation IV component materials.
  - Propose creep-fatigue failure criteria for 9 Cr, Grade 92 steel and Alloy 617, or a variant thereof.
  - Evaluate need for, and role of exemption rules, and initiate their development for four selected NGNP materials—two pressure boundary materials and two very-high-temperature component materials.
  - Complete Alloy 617 confirmatory structural tests and initiate testing of models for other key Generation IV structural materials.
- FY-09
  - Recommend interim unified constitutive equations for selected Generation IV materials.
  - Initiate development of a very-high-temperature flaw assessment procedure.
- FY-10
  - Recommend revised simplified methods for satisfying strain limits and creep-fatigue criteria.
- FY-11

- Finalize constitutive equations for key Generation IV structural metals.
- Validate creep-fatigue criteria for downselected component materials and weldments.
- Complete confirmatory structural tests and assessments for key Generation IV structural metals.

- FY-12 through FY-15
  - Validate simplified rules for ratcheting and creep-fatigue for Generation IV materials (FY-11).
  - Complete development of flaw assessment procedure for Generation IV structural metals.
  - Resolve identified shortcomings, issues, and regulatory concerns in high-temperature structural design methodology and criteria.

3.1.3 NGNP High-Temperature Non-Metallic Components

3.1.3.1 Materials Selection and Issues for Reactor Core Graphite, Reflector, and Supports

Graphite is the major structural component and nuclear moderator in the NGNP core. The graphites used previously in the high temperature gas reactor programs in the USA are no longer in production and thus replacement graphites must be found. Hence, it will be necessary to qualify new grades of graphite for use in the NGNP. Fortunately, likely potential candidates currently exist, including fine grained isotropic, molded or isostatically pressed, high-strength graphite suitable for core support structures, fuel elements and replaceable reactor components, as well as near isotropic, extruded, nuclear graphite suitable for the above-mentioned structures and for the large permanent reflector components. These candidates would meet the requirements of the draft ASTM materials specification for the Nuclear Grade Graphite. Graphite is a complex material whose structure and properties reflect the raw materials used in its manufacture, the processing techniques, and the thermal history of the material. Our understanding of neutron irradiation damage in graphite is well developed. However, fundamental models relating structure at the micro and macrostructural level to the irradiation behavior are less well developed.

Graphite is composed of a composite structure manufactured from a filler coke and pitch binder. Nuclear graphites are usually manufactured from isotropic cokes (petroleum or coal-tar derived) and are formed in a manner to make them near-isotropic or isotropic materials. After baking, (carbonization) the artifact is typically impregnated with a petroleum pitch and re-baked to densify the part. Impregnation and re-bake may occur several times to attain the required density. Graphitization typically occurs at temperatures >2500°C. Additional halogen purification may be required. Typical manufacturing times are 6-9 months.

The forming and densification processes impart property variations within the billet. The properties will be somewhat different in the forming direction compared to the perpendicular to forming direction. Moreover, a density gradient will exist from billet edge to center. These variations must be quantified for the selected grades of graphite. In addition, variations in property will arise from billet to billet within a batch, and between production lots. Finished graphite is machined to the complex geometries required for the reactor components (fuel elements, reflector blocks, core support post, etc.).

Experimental R&D plans for core graphite, reflector, and support materials

Early in the program, it will be necessary to review and document the existing data, from all available sources, on the properties of these new grades of graphite. Irradiation data from ongoing experiments in the Petten Reactor (European program) will be of great value. A complete properties database on the new (available) candidate grades of graphite must be developed to support the design of graphite core components. Data is required for the physical, mechanical (including radiation induced creep) and oxidation properties of graphites. Moreover, the data must be statistically sound and consider in-billet, between billets, and lot-to-lot variations of properties. The data will be needed to update and benchmark existing design models for graphite performance. Since the available near-isotropic, extruded graphites are somewhat similar to the prior grade H-451, design models for H-451 can be incrementally adjusted for the currently available graphites as new data becomes available. This review will provide data that will be input into the preliminary selection process.

As part of the preliminary selection process, a radiation effects database must be developed for the currently available graphite materials. As mentioned above, there is the potential to leverage data from European Union activities in the area of irradiation experiments on PBMR graphites (Petten Reactor irradiation experiments are currently being initiated). However, it is anticipated that a substantial number of additional graphite irradiation tests will be needed to complete the database. Since NGNP graphite service temperatures are anticipated to be as much as 200°C greater than that in the GT-MHR, additional data are required for all properties at these higher temperatures, including radiation damage effects. Therefore, in order to be qualified for the NGNP, existing graphite behavior models need to be modified based on sound materials physics and then validated/verified against new data for the currently available graphite grades. Property data must support the service conditions, including effects of higher temperature, helium gas (plus air and water), and neutron irradiation effects. Irradiation creep data for the candidate graphites must also be obtained.

Candidate graphite materials are known (see below). However, certain tests must be conducted to verify the candidate's relevant material properties meet the claims of the manufacturer. The Preliminary Selection process will need limited irradiation response data for the different grades of graphite. These test results will be used to establish the general behavior of a particular grade of graphite and confirm that it behaves similarly to previously "qualified" (for other nuclear reactors), near-isotropic, nuclear grades of graphite.

Nuclear graphite codes and standards development is required in support of the NGNP. American Society for Testing and Materials (ASTM) standard test methods are required for determining key physical and mechanical properties, for example the critical strain energy release rate (K_{Ic}), the crystalinity on the graphite (by X-ray diffraction), coefficient of thermal expansion, and the air oxidation rate. American Society of Mechanical Engineers (ASME) design codes must be developed for the graphite core supports structures and Carbon-Carbon (C/C) composite structures to be used in the NGNP. Activities on the graphite design code are already in hand by a task group under the auspices if ASME Section III. C/C composites are required for NGNP components such as control rod structural elements, upper vessel insulation support structure, and insulation shroud covers.

The fine-grained isotropic, molded or isostatically pressed, high-strength graphite suitable for core support structure includes Carbone USA grade 2020 and Toyo Tanso grade IG-110. Toyo Tanso grade IG-110 was used in the Japanese HTTR for fuel blocks and in the Chinese HTR-10 pebble bed reactor. These fine-grained materials are suitable for the fuel elements and replaceable reactor components.

New near isotropic, extruded, nuclear graphite have been developed in the United States and Europe for the South African Pebble Bed Modular Reactor (PBMR). The new, currently available graphites are GrafTek (UCAR) grade PCEA—a petroleum coke graphite, and SGL Grade NBG-10—a pitch coke graphite based on United Kingdom Advanced Gas-Cooled Reactor (AGR) fuel sleeve graphite. This graphite may be a candidate for the fuel elements and replaceable reactor components.

Graphite's suitable for the large permanent reflector components are currently in production (e.g., SGL grade HLM or GrafTek [UCAR] grade PGX). Some data are available for these graphite grades. Grade PGX was used for the permanent reflector of the Japanese HTTR, also PGX and HLM were used in Fort St. Vrain for the core support and permanent reflectors respectively. Fine-grain, high strength, graphite's are available from POCO Graphite, Inc. However, the available billet sizes are small and very expensive, thus not suited for NGNP core applications.

Near-isotropic, extruded, nuclear graphite's (e.g., grade H-451 manufactured by SGL Carbon) were developed in the 1970's for large helium cooled reactors such as the Fort St. Vrain reactor. However, grade H-451 graphite has not been manufactured in the United States for more than 25 years.

There is a substantial database for Grade H-451, including data for the effects of neutron irradiation on the properties, statistical variation of properties, oxidation behavior, etc. This body of data was considered sufficient to license the Fort St. Vrain reactor. Moreover, graphite behavior models were developed for Grade H-451 graphite. Fine grained isotropic, molded or isostatically pressed, high strength graphites suitable for core support structure (e.g., Carbone USA grade 2020 or Toyo Tanso grade IG-110) are available today. These fine-grained materials are suitable for the fuel elements and replaceable reactor components, but they cost about three or four times more than fine-grain, isotropic, extruded graphite.

Reactor Graphite R&D Tasks

The initial research and development activities in the graphite area focus on those tasks that of an urgent nature, i.e., their completion directly impacts the initial design phase of the NGNP, or are long-lead time items. In the C/C composite materials area activities are focused on ascertaining manufacturer's capabilities for the fabrication of large composites structures. The work described here will take place at several DOE laboratories and commercial companies. All work will be documented in the form of reports, which will be submitted to NGNP Materials Program Manager for approval.

Task 1A *Graphite Selection Strategy*

Several candidate graphites have been identified for components within the NGNP (Table 14). In selecting candidate graphites for the major components of the NGNP several factors must be considered. The inclusion of all of the graphites in the materials program is clearly cost prohibitive. Consequently, the scope of the NGNP graphite program should take in account of other activities within the Generation-IV Material Forum (GIF) for graphite database development (especially irradiation experiments) and the graphite needs of the prospective reactor suppliers. Moreover, the criteria for selection of graphites should consider if the particular graphite can satisfy multiple reactor vendor design requirements and are there sustainable precursors for extended production runs over the reactor's lifetime. By limiting the amount of material that needs to be irradiated for testing, there will be a reduction in cost and in schedule for this effort.

A strategy paper describing the selection process, the acquisition process and material receipt and storage requirements for the purchased graphite will be developed and submitted to the

NGNP Materials Program Manager for approval. The report will solicit input from the INEEL, ORNL, GIF members, and potential reactor vendors.

Task 1B *Procure a representative quantity of NGNP core graphite*

The production time for graphite is typically 9 months, and for a specialty materials such as nuclear graphite, could be as long as 12 months. It is anticipated that a representative "production lot" would represent several extrusion runs, sufficient to fill a baking furnace run (~20 tons). It is anticipated that only half the baking furnace load would be taken through graphitization. Consequently, procurement discussions must be held and bids must be sought during FY-05 if graphite is to be available in a timely manner for subsequent R&D activities. In FY05, the acquisition process for the selected graphite(s) will be implemented and QA qualifications of the prospective vendor(s) will be completed. The required QA program for acceptance and storage of the graphite will be implemented. It is further anticipated that the purchase costs for the selected graphite(s) would not be incurred until FY-06. Under an enhanced budget scenario, the purchase of selected graphites could be initiated.

Table 14. Candidate graphites for the core components of the NGNP.

NGNP Concept	Component Description	Candidate Grades
Prismatic Block	Fuel Element & Replaceable Reflector	Graftek PCEA
		SGL Carbon NBG-10
		Toyo Tanso IG-110
Prismatic Block	Large Permanent Reflector	Graftek PGX
		SGL Carbon HLM
Prismatic Block	Core Support Pedestals & Blocks	Graftek PCEA
		SGL Carbon NBG-10
		Carbone USA 2020
		Toyo Tanso IG-110
Prismatic Block	Floor Blocks & Insulation Blocks	Graftek PCEA
		SGL Carbon NBG-10
Pebble Bed	Reflector Structure	Graftek PCEA
		SGL Carbon NBG-10
		Toyo Tanso IG-110
Pebble Bed	Insulation Blocks	Graftek PCEA
		SGL Carbon NBG-10

Task 2 *HFIR Rabbit Capsule Graphite Post Irradiation Examination*

A series of 36 NGB-10 nuclear graphite bend-bar samples have been irradiated in rabbit capsules in the HFIR at ORNL. Each of the 18 rabbit capsules additionally contained a SiC

temperature monitor. Irradiation of the capsules was completed in FY-04. Post Irradiation examination (PIE) of the samples will include determination of the following irradiation effects data:

Volume Change

Dimensional Change (parallel & perpendicular to extrusion)

Dynamic Modulus (parallel to extrusion)

Flexural Strength (parallel to extrusion)

Thermal Diffusivity & Conductivity (parallel & perpendicular to extrusion)

Structural Change (via SEM examination) [enhanced budget cases only]

High Temperature Annealing Study (~1500°C) [Enhanced budget case B only]

Graphite PIE will be conducted at ORNL and a PIE report will be issued as an ORNL Technical Memorandum to the NGNP program manager for approval in FY-05.

Task 3 *Graphite Irradiation Creep Capsule Design & Experimental Planning*

A creep capsule will be designed for the ATR by engineers at INEEL with ORNL consultation. It is anticipated that the graphite samples will be loaded under compressive stress and irradiated at representative temperatures. The experimental parameters will be determined in consultation with NGNP stakeholders. In addition to creep rate data, post irradiation examination of the control samples will yield valuable irradiation effects data for the NGNP (thermal conductivity, cte, strength, etc.). It is anticipated that the capsule design will be completed in FY-05 and all necessary QA documentation prepared. Capsule construction and bench testing would commence in FY-06. Under an enhanced budget scenario, the creep capsule design is accelerated and construction and bench testing will be initiated in FY-05.

Task 4 *Fracture Toughness of Nuclear Graphite*

ASTM Committee DO2-F has identified a test method for determining K_{Ic} based upon the existing standard C1421 (for advanced ceramics at ambient temperatures). This standard should be modified for application to graphite and ruggedness tests performed using several different graphites. Once a modified version of the standard test method has been established round-robin testing will commence. Participation by INEEL is anticipated, along with other NGNP stakeholders. ORNL will analyze the K_{Ic} data and develop the ASTM required research report with precision and bias data. A standard test method for determining the K_{Ic} value of graphite will be prepared and approved through the ASTM DO2-F committee. The establishment of a standard method is a prerequisite for generation of graphite fracture toughness data needed to support the ASME design code development discussed in Task 5 (Codes and Standards Development). Enhanced funding will accelerate this task.

Task 5 *Codes and Standards Development*

ASME design code development is required for the graphite core support structures of the NGNP, and also for the C/C composites structures of the core. These activities are currently being undertaken by a project team (chaired by Tim Burchell) under Section III of ASME. Typically the committee will meet four times a year in conjunction with ASME “Code Week”. Participation of both ORNL and INEEL staff is anticipated in this activity. Standard test methods are also required for the generation of data that may be used in the design code. Such methods are developed through the ASTM and are then adopted by the ASME. The ASTM DO2-F committee of Manufactured Carbons and Graphites are currently engaged in the final stages of developing a Standard Materials Specification for Nuclear Grade Graphite, and are

also developing several standard test methods for graphites (crystalinity by XRD, surface area, thermal expansion, fracture toughness, and graphite oxidation for example). Participation of ORNL staff in DO2-F committee work is vital to the completion and adoption of such standard test methods.

The development of the draft ASTM DO2-F standard test method for air oxidation of graphite would be aggressively pursued at ORNL and INEEL. A round robin evaluation of the oxidation method will be conducted. Similarly, ORNL will lead an assessment effort to determine the applicability of the existing ASTM method for the BET surface area to graphite. The method will then be adopted into ASTM C-781 (Standard Practice for Testing Graphite and Boronated Graphite Components for High-Temperature Gas-Cooled Nuclear Reactors). Enhanced funding will accelerate this task.

Task 6 *Irradiation Behavior Model Development*

Mathematical models must be developed that describe and predict the behavior of nuclear graphite under neutron irradiation. Such models should be based upon physically sound principles and reflect known structural and microstructural changes occurring in graphites during fast neutron irradiation, such as changes in crystallinity, pore shape, coefficient of thermal expansion (bulk and single crystal), etc. Models for the graphite irradiation dimensional changes and irradiation creep behavior are a priority. Existing irradiation data may be used for model development, but validation of the models must be conducted using irradiation data obtained on the newer nuclear graphites being considered for the NGNP. Input data for such models must be obtained from the NGNP candidate graphites. Several modeling approaches will be explored. For example, models based on microstructural changes as described by bulk and crystal CTE changes, or fundamental atom-displacement models (ab-initio calculations) linked to finite element codes.

Task 7 *High Temperature Graphite Irradiation Experiments*

There are few data for the irradiation behavior of graphite at temperatures >1000°C. Hence, a high temperature graphite irradiation capsule will be designed which will be capable of irradiating graphite samples at temperatures up to 1200°C. An evaluation will be made to determine the most appropriate HFIR vehicle for these irradiations based upon capsule size limitations, ease of attaining the desired temperatures, and availability of space in the HFIR (e.g. rabbit capsule, target capsule or reflector capsule). Design of the first capsule will be completed in FY-05, along with an experimental plan and required QA documentation. Irradiation data to be determined on the candidate graphite(s) will include dimensional changes, elastic constants, strength and coefficients of thermal expansion. Pre- and Post-irradiation examination will be conducted at ORNL.

Task 8 IAEA *Graphite Irradiation Data Review*

Perform a review of both historical and ongoing graphite irradiation data available through the IAEA. This will be a joint effort between INEEL and ORNL requiring foreign travel to IAEA contributor's sites for discussion with principle investigators and physical collection of data. A NGNP white paper report will be issued outlining directions for requirements for future irradiation capsules, follow on PIE work, and requirements for future data collection. Under the current budget scenario, this task is not funded. An enhanced budget is required to fund and acquire IAEA graphite irradiation data.

A brief summary of R&D plans and schedules for the NGNP graphite core materials needed to meet the deployment time schedule is provided below. The schedule for these tasks is contingent upon funding availability.

Milestones

FY 2005

- Prepare strategy paper describing the selection process, the acquisition process and material receipt and storage requirements for purchased graphite
- Develop and implement the acquisition process for the selected graphite(s) and QA qualifications of the prospective vendor(s)
- Complete PIE of graphite scoping irradiations and issue results as an ORNL Technical Memorandum
- Complete irradiation creep capsule design and prepare all necessary QA documentation
- Support ASTM and ASME codes and standards developments for graphite
- Assess exist mathematical models that describe and predict the behavior of nuclear graphite under neutron irradiation and initiate modifications
- Complete design of the first high-temperature graphite irradiation capsule, along with an experimental plan and required QA documentation

FY 2006

- Initiate characterization to establish statistical variation of mechanical and thermal-physical properties within and among lots
- Initiate microstructural characterization to establish filler particle, pore size distribution, purity, Boron equivalent, and crystallinity factors
- Initiate graphite long-term oxidation in typical helium environment
- Design and fabricate additional capsules for qualification irradiations of primary candidate materials
- Evaluate existing NDE methods for acceptance testing of graphite billets
- Continue codes and standards development
- Complete ASTM standard materials specification development in support of NGNP graphite
- Complete design and construction of additional NGNP graphite irradiation creep ATR capsules

FY 2007

- Initiate long-term oxidation in off-normal helium environment
- Continue irradiation effects experiments, including dimensional changes and property changes
- Design and fabricate additional capsules for irradiation-creep irradiations

- Continue codes and standards development
- Complete graphite physical and mechanical properties evaluations for NGNP
- Complete preliminary graphite oxidation effects studies of NGNP graphites
- Complete preliminary irradiation effects studies of NGNP graphites

FY 2008

- Perform PIE of qualification irradiations to determine effects of irradiation temperature and fluence on property data
- Continue irradiation-creep effects capsules
- Assess oxidation as a function of helium impurity content to provide input for design specifications
- Establish oxidation kinetic data for the graphites for air-ingress accident simulation and modeling.
- Develop improved methods for NDE of graphite billets and in-service inspections
- Continue codes and standards development
- Complete final characterization of baseline physical and mechanical properties of NGNP graphites

FY 2009

- Complete required ASME Code revisions
- Continue standards development
- Complete final graphite oxidation effects studies of NGNP graphites
- Continue graphite irradiation effects of properties studies of NGNP graphites

FY 2010

- Complete graphite irradiation effects studies
- Complete graphite standards development

FY 2011

- Complete irradiation creep studies of NGNP graphites

3.1.3.2 Ceramic Materials Selection and Issues for Thermal Insulation

High temperature fibrous insulation must be used throughout the reactor system and the power conversion unit notably in the hot duct, upper plenum shroud, SCS helium inlet plenum, and turbocompressor. These materials are typically considered for lifetime operation. The insulation is required to retain its resiliency and physical characteristics during normal operating and conduction cooldown accident conditions.

Operating conditions for fibrous insulation include low neutron fluence (<0.01 dpa) and gamma flux, and high temperatures. The currently envisioned design will require fibrous insulation to operate at normal, and off-normal temperatures of 1000°C and 1200°C, respectively. Mechanical loads on the thermal insulation result from differential thermal expansion, acoustic

vibration, seismic vibration, fluid flow friction, and system pressure changes. Typical operating conditions are listed in Table 15.

Fibrous insulation was used in The Fort Saint Vrain HTGR and in other gas reactors in Germany and Japan. Test programs to support the acquisition of design and performance data were conducted on Kaowool and Quartz-et-Silica fibrous mats. Limited irradiation effects tests data is available. Tests to determine fatigue properties as a function of acoustic noise were planned but not conducted.

Insulation design surveys have indicated that a suitable insulation system, where significant structural support is not required, for NGNP applications is the use of Al_2O_3 and SiO_2 mixed ceramic fiber mats (K_{th}<0.1 W/m-K) contained between metallic or carbon-carbon composite cover plates attached to the primary structure that requires insulation. However, the operating normal and off-normal temperatures (1000 and 1200°C) are aggressive for application of the

Table 15. Conditions affecting materials selection for reactor internals thermal insulation and potential candidate NGNP materials.

Component	Sub-components	Normal NGNP operating conditions			Abnormal operating conditions	Potential Candidate NGNP Materials
		Nominal Temp (°C)	Neutron fluence with E≥0.1 MeV	Medium		
SCS unit metalworks Insulation	Conical shell at SCS HX	1000	$3 \cdot 10^{16}$ cm^{-2} per 60 years	Helium	~1200°C At start of cool down. Then ~1000°C	carbon-carbon composite canisters with refractory fibrous mat
	Outer shell of thermal insulation element unit	1000			1000°C At start of cooldown	carbon-carbon composite canisters with refractory fibrous mat
Hot gas duct	Inner shell of thermal insulation element unit	650	$2 \cdot 10^{17}$ cm^{-2} per 60 years	Helium	1000°C At start of cooldown	carbon-carbon composite canisters with refractory fibrous mat

Component	Sub-components	Normal NGNP operating conditions			Abnormal operating conditions	Potential Candidate NGNP Materials
		Nominal Temp (°C)	Neutron fluence with E≥0.1 MeV	Medium		
In-vessel metalworks Insulation	Thermal Insulation	600-1000			1000°C At start of cooldown	(Mix of refractory fibers held with high temperature screen and wires stays.)
	Metal support bottom Plate insulation				~700°C	Carbon-carbon composite blocks
	SCS entrance structural tubes Insulation	600	$2.0 \cdot 10^{17}$ cm^{-2} per year	Helium	~1200°C At start of cool down. Then ~1000 C	carbon-carbon composite canisters with refractory ceramic fiber mats
	Upper Plenum Shroud Insulation				~1200°C At start of cool down. Then ~1000°C	carbon-carbon composite canisters with refractory ceramic fiber mats
	Ceramic Floor Block	600	$4.5 \cdot 10^{16}$ cm^{-2} per year	Helium	600°C	Graphite, Alumina, Mullite, Composite
	Top Insulator Block	700	$1.5 \cdot 10^{16}$ cm^{-2} per year	Helium	1100	Graphite, Alumina, Mullite, Composite
	Bottom Insulator Block	1050	$1.5 \cdot 10^{16}$ cm^{-2} per year	Helium	600	Graphite, Alumina, Mullite, Composite

Kaowool. As example, pumpable Kaowool temperature limit for continuous operation is 1093°C. Maximum temperature rating is typically 1260°C for the highest performing Al_2O_3 and SiO_2 mixed ceramic fiber mat insulation. Typically, by reducing the fraction of silica in the wool, or through simultaneous reduction of silica and addition of ZrO_2, insulating mats can achieve continuous and maximum operating temperatures of 1300 and 1400°C respectively. High-purity alumina mat can achieve operating temperatures above 1500°C. However, these higher temperature mats would not take advantage of previous data and experience gained with the Kaowool product, therefore a premium would be paid for their use.

The canisters are in direct contact with the hottest gas conditions in the reactor. Thus, the materials chosen for these canisters will need to withstand 1000°C for 60 years, or up to 1200°C for up to 50 hours and then 1100°C for 100 hours during a loss of flow condition (LOFC) followed by a conduction cooldown transient. For this reason non-metallic materials such as carbon-carbon composites may be required for some of these canisters. The metallic canister

materials would be chosen from the list of materials identified above in Table 11. The carbon-carbon composites will be chosen from those materials identified below in Table 15.

The insulating materials previously discussed required fairly modest mechanical performance requirement, therefore low specific density fibrous materials can be considered. However, for applications such as the top and bottom insulator blocks, the ceramic floor block, and possibly the canisters holding the fibrous insulation of the hot gas duct, the mechanical loading and need for creep resistance is such that monolithic or composite materials are needed. Typical operating parameters for these systems are also provided in Table 15. Given that the operating temperatures are modest and the neutron fluence is low, achieving a lifetime material appears a desirable, attainable goal. Graphite is a potential candidate material for both top and bottom insulator blocks. The bottom insulator block will most likely be a refractory ceramic. However, consideration will be given to improved low-thermal conductivity graphites for all three functions along with commercially available refractory ceramics such as alumina, mullite and composite materials. Assuming a high-quality, high-purity commercial material radiation effects will not be an issue. The properties that will drive the selection are the non-irradiated thermophysical properties in particular thermal conductivity, compressive strength and fracture toughness, and cost. When comparing full density brick forms of mullite and alumina significant differences in properties are noted. In particular, high alumina brick will possess significantly higher thermal conductivity as compared to mullite (and very similar to low-conductivity graphites) but exhibits extremely high compressive stress and somewhat higher fracture toughness as compared to mullite. Creep, which will be of particular importance, will also be lower for alumina as compared to the mullite.

Expected research, testing, and qualification needs for ceramic insulation materials

The first step in the research program on ceramic insulation materials for the NGNP will be a comprehensive and detailed review of the potential candidate materials identified in Table 15. Preparation of a materials test program in support of ceramic insulation materials requires knowledge and understanding of the materials requirements dictated by the operating conditions of those components.

Data on the manufacture and performance of fibrous insulation are needed to ensure that the selected materials are capable of lasting for the life of the plant. The data include: physical properties (heat resistance, heat conductivity and heat capacity), long term thermal and compositional stability, mechanical strength at temperature, resistance to pressure drop, vibrations and acoustic loads, radiation resistance, corrosion resistance to moisture- and air-helium mixtures, stability to dust release and gas release, thermal creep, and manufacturing tolerances and mounting characteristics. The acquisition of these data requires testing of insulation specimens or small assemblies of thermal insulation panels and application of appropriate ASTM standards. This standards development work will be supported within this program. Moreover, application of current non-destructive evaluation techniques, especially in support of the monolithic insulators, is included within this test plan. Specific test rigs and facility requirements include helium flow, vibration, and acoustic test equipment as well as an irradiation facility and hot cell. Prototype assemblies testing is not planned to include neutron irradiation. However, this decision will be made following the neutron and gamma irradiation testing.

Experimental ceramic insulation materials R&D plans

A brief summary of R&D plans and schedules for the NGNP ceramic insulation materials needed to meet the deployment time schedule is provided below. The schedule for these tasks is contingent upon funding availability.

Milestones

FY 2006

- Perform comprehensive review of the potential candidate insulation materials
- Assemble, analyze, and evaluate existing database
- Initiate screening tests for mechanical and thermal properties of fibrous and monolithic insulations materials

FY 2007

- Initiate baseline testing of mechanical and thermal-physical properties
- Initiate neutron and gamma irradiations for effects on mechanical and thermal-physical properties
- Initiate long-term aging for dimensional stability of compacts and assemblies
- Initiate ASTM standards development

FY 2008

- Initiate acoustic vibration and pressurization-depressurization endurance testing
- Initiate qualification irradiations to provide to determine effects of irradiation temperature and fluence on property data for primary candidate materials
- Initiate environmental stability testing
- Initiate dust and gas release testing
- Initiate NDE development for monolithic materials

FY 2009 and 2010

- Complete pressurization-depressurization endurance testing
- Complete dust and gas release testing
- Complete baseline testing of mechanical and thermal-physical properties
- Complete neutron and gamma irradiations and PIE for effects on mechanical and thermal-physical properties
- Initiate technology and manufacturability transfer
- Initiate performance testing of insulation prototypes

FY 2011

- Complete acoustic vibration
- Complete environmental stability testing
- Complete long-term aging for dimensional stability of compacts and assemblies Perform PIE to determine irradiation creep effects

- Complete technology and manufacturability transfer
- Complete performance testing of insulation prototypes
- Complete NDE development for monolithic materials

3.1.3.3 Reactor Structural Composites Materials Selection and Issues

The use of carbon-carbon (C/C) composite is desired for many applications within the reactor because of its strength retention at high temperatures. For example, C/C will likely be needed for the control rod sheath for a prismatic NGNP because metallic materials cannot withstand neutron irradiation and high temperature of 1050°C or higher found in the core. The anticipated carbon-carbon composite material components of the NGNP are listed in Table 16.

Carbon-carbon-composite materials are typically developed for specific applications and are not available off the shelf. The composite architecture (i.e., fiber type, fraction, orientation, lay-up) and processing conditions are selected to tailor the carbon-carbon-composite material for a specific application. Thus, prototype components must be produced from which material test specimens are cut and subjected to the appropriate thermal and irradiation conditions in the materials test program.

A fortunate aspect of carbon-carbon is that existing data has shown that the C/C components that are not in the core of the reactor are not expected to experience neutron exposures high enough to cause any problems with strength, swelling, thermal conductivity, etc. Existing data has shown that C/C can easily withstand the neutron doses in all the components with the exception of the control rods. This data shows that C/C composite control rods will likely be the need to changed at least twice, hence the need to also evaluated silicon-carbide/silicon-carbide (SiC/SiC) composites for longer life applications.

There is recent evidence that control rods fabricated from SiC/SiC composites have the potential to survive for the full reactor lifetime within the high radiation environment within the core. Unfortunately, these SiC/SiC composites have not been as fully characterized as C/C composites, so there is more uncertainty in the applicability. It is therefore necessary to evaluate both C/C and SiC/SiC for the control rod material.

A preliminary list of selection factors for primary ceramic composites candidate materials is provided in Table 17.

Table 16. Conditions affecting materials selection for structural composites and potential candidate NGNP materials.

Component	Sub-components	Normal NGNP operating conditions: Nominal Temp (C)	Normal NGNP operating conditions: Neutron fluence with E≥0.1 MeV	Normal NGNP operating conditions: Medium	Abnormal operating conditions	Potential Candidate Materials
CPS drive RSS drive	Control rod guide tube RSS balls guide tube	600 at CRD to UPS Interface.	$3 \cdot 10^{16}$ cm^{-2} per year	Helium	Working fluid temperature in cooldown mode through RCCS can increase to 1200°C within 100 h	C/C SiC/SiC
SCS unit metalwork	Conical shell at SCS HX	1000	$3 \cdot 10^{16}$ cm^{-2} per 60 years	Helium	~1200°C at start of cool down. Then ~1000°C	C/C
Hot gas duct	Outer shell of thermal insulation element unit	1000	$2 \cdot 10^{17}$ cm^{-2} per 60 years	Helium	1000°C at start of cooldown	C/C
	Inner shell of thermal insulation element unit	650			1000°C at start of cooldown	C/C
In-vessel metalworks	SCS entrance tubes & chamber insulation assembly	600	$2.0 \cdot 10^{17}$ cm^{-2} per year	Helium	~1200°C at start of cool down. Then ~1000°C	C/C
	Upper core restraint				~1200°C	C/C

Table 17. Relative strengths of ceramic composite materials for NGNP applications.

Pros	Cons
SiC_f/SiC Composites	
Good oxidation resistance	Higher cost than C/C
Stronger than C/C	Many have Boron coated interfaces
Greater radiation damage resistance than C/C	Free silicon (not desired)
Less change-out, lasts longer	Lack of manufacturing/infrastructure
	Qualification – different weaves require a new qualification. ASME specification issue.
C_f/C Composites (Note: Replacement for super alloys. Could be used for guide tubes [~10 feet long, telescope feature] and the Upper Core Restraint structure.)	
Good material for accident situation.	More Radiation damage/shrinkage than SiC/SiC.
Flaking is less likely than SiC/SiC.	Qualification – different weaves require a new qualification. ASME specification issue.
Eliminates metal from the core.	Lack of design criteria.
Good Residual properties (e.g., strength). Strength and fracture resistance is greater than graphite.	
C_f/SiC Composites	
Higher thermal conductivity than SiC_f/SiC	Possible Radiation damage
Higher strength	Qualification – different weaves require a new qualification. ASME specification issue.
Higher moderating power	

Expected research, testing, and qualification needs for NGNP structural composites

Currently there are several manufacturers of carbon-carbon composites that may be suitable for reactor-core components (pitch-based matrix with pitch-based fibers). However, these manufacturers have not qualified any of their recent high-performance materials for nuclear applications. Additionally, large-sized SiC/SiC composites are not as available as C/C composites and much of the knowledge about the behavior of SiC/SiC composites has been generated with laboratory-sized samples using simple testing conditions. Moreover, because these composite materials have undergone rapid development within the last 10 years, only very limited data is available for the newest, radiation-resistant materials. Therefore, a more detailed effort will be needed for SiC/SiC components. Also, the infrastructure for manufacturing SiC/SiC composites is much more limited, and not as mature as that for C/C, and will likely need to be developed or enhanced.

For carbon-carbon materials, there are limited mechanical and thermal-physical property data at elevated temperatures that will need to be augmented. In addition, the manufacturers and their prime candidate materials must be examined for repeatability, quality, and eventual size of manufacture, as many of the parts will be very large. The scale-up of parts will be aided by stress-analysis codes, which are quite mature for carbon-carbon; however, the codes will need to be adapted for the specific fiber architectures selected.

The first experimental areas for research in this program will be to examine the two most potentially life-limiting processes of irradiation effects and oxygen effects. The irradiation

effects program will perform a side-by-side comparison of the two most radiation resistant forms of CFC and SiC currently available. Following a pre-irradiation evaluation of SiC/SiC tubular structures, irradiation to NGNP-relevant doses and statistically meaningful populations of tubes will be carried out. In parallel, an environmental effects study will be carried out on SiC/SiC to ascertain the stability of the fiber matrix interface in NGNP atmosphere. Additionally, the primary failure mode under stress will be studied to determine whether SiC/SiC tubular structures can withstand long-term loading produced by NGNP control rod applications.

The graphite composite to be studied was manufactured by Fiber Materials Inc., (FMI-222) and is a balanced weave, pitch fiber, pitch matrix composite. It has been selected because of its high-quality and radiation-effects database. SiC composites for this study will be fabricated by Hypertherm in collaboration with ORNL and PNNL. Both flat plate and tubular geometries will be studied. The architecture to be manufactured will be studied in the initial phases of the collaboration. The fibers to be infiltrated will be Nicalon Type-S, based on their previous, excellent radiation performance. The matrix will be fully crystalline beta-SiC deposited by chemical vapor infiltration.

Irradiation Program

Long-Term Stability, Strength and Thermal Properties

Irradiation will be carried out in the peripheral target tube position of the High Flux Isotope Reactor. The irradiation matrix is given in Table 18. This matrix compliments ongoing ORNL fusion 18J irradiation (~ 10 dpa, 800°C+, data available >2006) and the proposed Futurix-MI Irradiation (~20dpa, ~1000°C, data available >2008.) Primary target irradiation temperature (950°C) was selected based on the draft NGNP materials plan. The bounding temperatures of 800 and 1100°C were chosen to allow comparison to the US fusion 14J and 18J experiments along with the NGNP graphite scoping irradiation program nearing completion (300, 500, and 800°C.) Moreover, the proposed irradiation matrix will provide valuable information on the performance of SiC/SiC in an appropriate temperature range for the GFR concept (500-1200°C, 80 dpa.) Assuming materials begin irradiation in the first year of program, the highest dose capsules will be available in the third year of the program. If desirable, a subset of three capsules identical to BS1-3 could be irradiated to higher dose (e.g. 80 dpa) in support of GFR for little extra cost. Data from these materials would be available ~2009.

Irradiation Creep

It is expected that the NGNP control rods will be subjected to low stress, long-duration tensile loads within a high temperature irradiation environment. A significant concern for these materials is creep or environmental degradation under combined load and irradiation. It will be necessary to first characterize the creep behavior of composite materials in the absence of irradiation with He atmospheres containing oxygen impurity levels that bracket the expected operating conditions for the NGNP. Irradiation creep tests in prototypic reactor environments will be carried out in the Advanced Test Reactor (ATR).

Table 18. HFIR irradiation matrix.

Capsule	Material	Temperature °C	Dose (dpa)
BS1	SiC/SiC bar	800	10
BS2	SiC/SiC bar	800	20
BS3	SiC/SiC bar	800	30
BC1	C/C bar	800	10
BC2	C/C bar	800	20
BC3	C/C bar	800	30
TS1	SiC/SiC tube	800*[T1 tbd]	10
TS2	SiC/SiC tube	800*[T1 tbd]	20
TS3	SiC/SiC tube	800*[T1 tbd]	30
TS4	SiC/SiC tube	950*	10
TS5	SiC/SiC tube	950	20
TS6	SiC/SiC tube	950	30
TS7	SiC/SiC tube	1100*[T2 tbd]	10
TS8	SiC/SiC tube	1100*[T2 tbd]	20
TS9	SiC/SiC tube	1100*[T2 tbd]	30

In the first phase of the program time-dependent creep of either SiC composite tubes or alternative architectures will be proven in the laboratory setting. Once the techniques for such testing are validated experimentally and by comparison with the ongoing modeling at PNNL, an experimental program will be mounted to determine the out-of-pile creep response for tubular samples. Based upon experience gained from the out-of-pile tests, an experimental

program to generate in-reactor creep information will be initiated. In-pile experimental creep design input will be derived from out-of-pile experience, preform architecture, ATR reactor core dimensions, temperature and time in reactor. Specific environment and irradiation parameters are to be decided based on reactor design input.

As part of this validation study, the sensitivity of SiC/SiC to low-level impurities will be included. Long-term, environmental effects derived from impurities such as oxygen, hydrogen or moisture must be considered in terms of composite irradiation creep. Experimental and modeling data on SiC tubular structures, especially in oxygen-containing irradiation environments, will be required similar to current studies on C/C composite structures. It is envisioned that this program will be conducted in parallel with the carbon fiber composite creep program and apply similar irradiation vehicle design.

Environmental Effects

The high-purity He environment presumed for the NGNP, provides some interesting issues for materials degradation at high temperatures. Carburization of metals is observed in low-oxygen-potential environments but is reduced in high-oxygen-potential environments. Control of the oxygen potential is seen as an effective means of reducing carburization of metals and alloys in the NGNP but the effects of increased oxygen potential on the corrosion rates of SiC/SiC will need to be established. A focus of this research will be to determine the corrosion mechanisms and rates associated with degradation of the fiber/matrix interphase in the SiC/SiC materials. This has been shown to the critical mechanism that shifts the degradation or failure modes from fiber creep domination to interphase degradation. Testing and modeling of newer SiC/SiC will have to be performed to generate a failure mechanism map using simulated HTGR gas environments.

Typical simulated advanced HTGR helium chemistries used in various previous test programs are shown in Table 8**.** As shown, the main impurities are H_2, H_2O, CO and CH_4. The hot graphite core is considered as reacting with all free O_2 and much of the CO_2 to form CO, and with H_2O to form CO and H_2. In addition, in cooler regions of the core, H_2 reacts with the graphite via radiolysis to produce CH_4. The overall stability of the proposed helium environment that will be representative of the NGNP must be evaluated in order to ensure that testing proposed is performed in environments that have consistent chemical potentials. Therefore, testing of both the helium environment to be used for mechanical properties and general corrosion evaluations of the candidate materials to establish their overall compatibility with that environment will be performed at temperatures up to at least 50°C above the proposed operating temperature for the SiC/SiC materials.

Creep-crack growth studies on SiC/SiC composite bars will be used to investigate the degradation mechanisms at 1000°C in the simulated NGNP environment. Concurrent thermo-gravimetric measurements will be used to study environmental mass loss and corrosion mechanisms. A mechanical-chemical model of creep crack growth in SiC/SiC, which has been developed at PNNL, will be used to calculate crack growth rates and compare them to measured growth rates [19,20]. Life-prediction models for SiC/SiC in NGNP environments will be constructed and tested based on these results.

Failure Mode Testing

SiC/SiC tubes will be tested in tension, compression, and using burst testing at 1000°C in inert and simulated NGNP environments to determine likely failure modes of control rod guide tubes. This will be done as a function of tube architecture and design. The output of the creep crack growth model and life-prediction models will be used to guide the choice of strain rate and loading parameters.

Post Irradiation Examination

Post irradiation testing will be carried out in established hot-cell facilities at ORNL and PNNL. Testing will include, but not be limited to the following:

- Thermal conductivity ASTM E 1461-01
- Irradiation-induced dimensional change
- Sonic Elastic Modulus
- Room temperature bend strength
- Burst strength of tubes
- Slow crack growth testing of irradiated bars in simulated NGNP gas
- Scanning and transmission electron microscopy of irradiated materials.

ASTM Guideline Support

The need for continued ASTM guideline development has been highlighted as a critical issue for both carbon-carbon and SiC/SiC composites under NGNP. Currently there are few national or international full-consensus standards for evaluating advanced ceramics and CMCs in particular. Technical and pragmatic issues related to standardization efforts for CMCs must be evaluated for full consensus standards [that is, American Society for Testing and Materials (ASTM) Subcommittee C28.07 on Ceramic Matrix Composites, Comit Europen de Normalisation (CEN) Subcommittee TC184/SC1 on Ceramic Composites, and International Organization for Standardization (ISO) Technical Committee TC206 on Fine (Advanced, Technical) Ceramics]. This task will provide for continued involvement of key personnel involved in these efforts, and in particular to ensure guidelines for testing of tubular SiC/SiC structures is moved forward.

Experimental structural composite materials R&D plans

A brief summary of R&D plans and schedules for the NGNP structural composite materials needed to meet the deployment time schedule is provided below. The schedule for these tasks is contingent upon funding availability.

Milestones

FY 2005

- Select appropriate tube architecture and infiltrate Nicalon Type-S fiber, multilayer SiC interphase composite
- Irradiate multilayer SiC interphase SiC/SiC and FMI-222 graphite composite bend bar capsules for determination of CFC lifetime and comparison with SiC/SiC. Begin capsule disassembly.
- Define appropriate gas environment. Model and define potential corrosion effects of SiC/SiC for VHTR.
- Perform limited creep crack growth testing in HTGR gas.
- Conduct testing to determine failure mode of composite tubes under stress.
- Begin definition of creep tube geometry for out-of-pile and in-pile testing.

- Begin interface on coupling creep modeling and experiment.
- Form ASTM working group on SiC/Composite testing development

FY 2006

- Perform second round of processing for optimized tube infiltration
- Construct and begin irradiation of tubular geometry specimens
- Carry out PIE of BS and BC bends bar capsules
- Complete crack growth testing.
- Conduct failure mode testing of tubes to be irradiated.
- Conduct out-of-pile creep testing. Finalize geometry for in-pile creep test.
- Begin design effort on in-pile creep.
- Begin to qualify vendors
- Continue Involvement in ASTM guideline development.

FY 2007

- Complete PIE of TS tubular geometry
- Conclude failure mode testing.
- Summarize experiment and modeling verification of creep testing.
- Complete report on composite fabrication effort.
- Complete construction of in-pile creep experiment.
- Initiate aging and evaluation of aged potential candidate test materials
- Continue Involvement in ASTM guideline development.

FY 2008

- Complete higher-level PIE including TEM.
- Complete in-pile creep experiment.
- Completion of ASTM guideline for SiC/SiC tube testing.
- Issue Final Report
- Complete aging of potential candidate test materials and continue characterization of mechanical and thermal-physical properties

FY 2009 and 2010

- Procure full-scale prototypes for testing
- Complete baseline testing of prototype materials
- Complete characterization of mechanical and thermal-physical properties of aged materials

3.2 Potential Candidate Materials Selections and Research Plans for SCWR

Three primary factors will most affect the properties and choice of the structural materials from which the SCWR components will be fabricated. These are effects of irradiation, high-temperature exposure, and interactions with both the sub- and supercritical water environment to which they are exposed. An extensive testing and evaluation program will be required to assess the effects that these factors have on the properties of the potential materials for SCWR construction to enable a preliminary selection of the most promising materials to be made and to then qualify those selected for the service conditions required.

The potential candidate materials selected for the SCWR and the details of the research plans deemed necessary to establish the viability of the reactor concept with regard to materials performance are described in the following sections.

3.2.1 General Considerations for SCWR Materials Research

A discussion of two of the three primary considerations for SCWR service, irradiation and high-temperature exposure are described in the corresponding section on NGNP Materials in this report. The third primary consideration, materials interactions with both the sub- and supercritical water environment is described below.

3.2.1.1 Water Chemistry and Corrosion Issues in SCWRs

The single greatest unknown that will impact the viability and eventual operation of the SCWR is the chemistry of supercritical water in the presence of radiation. While the impact of the SCWR water chemistry will be most important in-vessel, it is possible, dependent on design, that there will be spillover effects on the power conversion systems for which water chemistry control is also very important. This section attempts to outline potential issues that may need to be addressed. Even though these corrosion considerations are quite pervasive across multiple components, there is no particular section on specific corrosion materials R&D tasks and funding needs in this report. In lieu of that, the R&D to address the various corrosion issues has been incorporated into the overall R&D described for each component, as needed, in the component requirement sections that follow.

The mechanisms for environmentally sensitive cracking in water-cooled reactors that have been observed include intergranular stress corrosion cracking (IGCC), irradiation-assisted stress corrosion cracking (IASCC), and corrosion fatigue. These mechanisms are affected by several variables including:

- Metallurgical structure, including the presence of $M_{23}C_6$ phases, phase morphology, and depletion of the Cr in zones adjacent to grain boundaries;
- Irradiation effects on grain boundary impurity segregation; and
- The aqueous environment, especially the presence of oxidizers and reducers.

In the case of IASCC of austenitic stainless steels, an additional parameter is a fluence threshold that is approximately equivalent to 1 displacement per atom (dpa). Further, nickel-base super alloys are sensitive to the presence of impurities including phosphorous, silicon, boron, and sulfur.

While materials have been identified that function in LWRs, the performance of these same materials in a SCWR is uncertain and will be dependent on the environment of the SCWR. In this respect, while operating temperatures have been proposed, the water chemistry is ill defined.

There are several aspects of the water chemistry of the SCWR that will impact the corrosion behavior of materials of construction. The concentrations of the transient and stable species due to radiolysis of the water, and the higher thermal decomposition of the water due to the higher operating temperature (as compared to LWRs), may well be significantly different. The chemical potential of oxygen and hydrogen peroxide, which will be significantly different in the supercritical fluid, will affect the corrosion potential of the water. This in turn determines whether magnetite (Fe_3O_4) or hematite (Fe_2O_3) forms and the morphology of these films, which are important to corrosion control on low alloy steels, heat affected zones, etc.

The chemical potential of the hydrogen should change as much as the chemical potential of the oxygen and hydrogen water chemistry may be just as effective in reducing the oxygen content. However, a decrease has been observed in the critical reaction rate of the OH radical with hydrogen above 300°C. Because the radiolysis in the core is kinetically controlled, it might require much more hydrogen to suppress the oxygen and peroxide generation. If too much is required, metal hydriding could occur. The trade-off between these effects, will, to a large extent, determine how much of the LWR and fossil plant water chemistry control experience is applicable to the SCWR. The control of pH, while theoretically possible, may be difficult in practice, especially in the 300 to 500°C temperature range. The pH of the water is important in setting the corrosion potential and rate, and to some extent, the mode of corrosion. A range of pH has been successfully employed in LWRs, and this approach will need to be explored.

There is indeed a wide body of experience regarding performance of materials in water environments relevant to the SCWR that has been developed in LWR and supercritical fossil-fired power plants. Control of the water chemistry has been critical to the continued operations of LWRs. The boiling water reactor (BWR) would normally operate with an oxygen overpressure and is also slightly acidic because air carries CO_2, which leads to formation of carbonic acid. The result is a rather aggressive environment, which could cause excessive corrosion of the reactor materials. In BWRs, the general expectation is that the propensity for SCC will increase with increasing oxygen content, and hydrogen is generally added to the feedwater to recombine with oxygen and suppress the corrosion potential below the threshold for SCC. However, it takes a significant hydrogen overpressure to induce recombination of oxygen with hydrogen. In recent years, thin layers of noble metals (i.e., platinum and rhodium) have been deposited on the surface of BWR structural materials to suppress the corrosion potential even at relatively low hydrogen injection levels. On the other hand, the PWR is an indirect cycle, less susceptible to air infiltration. However, an oxygen overpressure would be present in PWRs as well due to diffusion of radiolytic hydrogen out of the system. Therefore, hydrogen is also injected in the primary coolant of PWRs, but at somewhat lower rates than in BWRs. Also, a minimum high temperature (about 300°C) pH of 6.9 is required to avoid heavy crud deposits on the fuel rods and boron must be added to the coolant in the form of boric acid as a neutron absorber for reactivity control. Therefore, to counter the effect of the boric acid on the pH, lithium hydroxide is dissolved into the PWR primary water.

In once-through fossil-fired units (the circuit does not include a steam-separation drum) of the type considered in the SCWR, the quality of the water is controlled by treatment of the feedwater. In the U.S., two major approaches are used:

(i) The all-volatile treatment (AVT), which is based on measures to practically eliminate oxygen from the system to prevent corrosion. In this treatment the pH is adjusted (ammonia) to 9.2-9.6 for all-ferrous systems (8.8-9.1 for mixed ferrous-copper systems), and the oxygen content of the water is controlled to < 5 ppb (cation conductivity is in the range 0.2-0.4 $\mu S \cdot cm^{-1}$). This is accomplished by de-oxygenation in the condenser and

deaerator, followed by the addition of oxygen-scavenging chemicals such as sodium sulfite (decomposes above 6.2 MPa) or, more recently, hydrazine. A problem with this approach is that the normally protective oxide formed on ferrous alloys is unstable in the feedwater train, leading to dissolution and transport of corrosion products, as well as erosion-corrosion attack of the economizer inlet tubes.

(ii) Oxygenated treatment (OT; used only for all-ferrous systems), in which the pH is adjusted (ammonia) to 8.0-8.5 and then, following purification in the condenser, demineralizer/condensate polisher, and deaerator (to < 0.2 $\mu S \cdot cm^{-1}$), oxygen is added to the level of 30-150 ppb. The resulting high-purity water minimizes corrosion of the feedwater train up to the economizer inlet. The controlled, but limited oxygen content promotes the formation of a more protective layer of Fe_3O_4, in which the pores are blocked by FeOOH; this modified magnetite layer also has a lower solubility than magnetite in the feedwater. Adoption of oxygenated water treatment has resulted in a significant reduction of water-steam-side corrosion-related problems in fossil-fired units.

The water chemistry guidelines for AVT, OT and for LWRs are compared in Table 19. Guidelines for determining the most appropriate water treatment system for a given plant configuration are available in a series of reports published by EPRI.

Table 19. Typical primary water chemistry of supercritical fossil plants and LWRs.

Items	Fossil AVT[a]	Fossil AVT[b]	Fossil OT	BWR[c]	PWR[c,d]	SCWR
Pressure, MPa	25-30	25-30	25-30	6.9	15.5	25
Inlet temp. °C	~280	~280	~280	278	286	280
Outlet temp. °C	540-600	540-600	540-600	285	324	500
Conductivity (inlet) $\mu S\ cm^{-1}$	<0.2	<0.2	<0.15	<0.1	1-40	?
Oxygen, ppb	1-10	<5	30-150	50-200	100	?
Hydrogen, ml/kg (STP)	na	na	na	0-50[e]	25–50[f]	?
LiOH, ppm	DC	DC	DC	DC	0.6–4	DC
Boron, ppm	DC	DC	DC	DC	0–2000	DC
Cl^-, ppm	na	na	na	<0.1	<0.15	?
F^-, ppm	na	na	na	<0.1	<0.15	?
Fe, ppb	<5	<10	<5	<1-2	na	?
Cu, ppb	<2	<2	na	<0.1-0.3	na	?
Silica, ppb	<20	<20	na	na	na	?
pH (room temperature)	9.2-9.6	8.8-9.1	8.0-8.5	6.5–7.0	6.9–7.4	?

[a] plants with all ferrous condenser/feedwater system
[b] plants with mixed metallurgy
[c] P. M. Scott 1998.
[d] IAEA 1997.
[e] EPRI recommends use of the lower number.
[f] In the feedwater.
DC = not applicable because of the direct cycle.
na = not available

3.2.2 Reactor Pressure Vessel Materials Selection and Issues

It is assumed that the RPV design will include a feature to insulate the outlet nozzle from the outlet coolant temperature of 500ºC and ensure vessel operation at 280ºC. The inner surface of the vessel will be exposed to water at 280ºC thus would be clad with a weld overlay of Type 308

stainless steel and the outer surface will be insulated, most likely in a manner similar to existing PWRs. Given the operating temperature of 280ºC and an expected irradiation exposure similar to that of current generation pressurized water reactors (PWR), the primary candidate materials for the RPV shell are those currently used in PWRs, namely SA 508 Grade 3 Class 1 forging (formerly designated SA 508 Class 3) or SA 533 Grade B Class 1 plate. The RPV thickness given above assumes one of those materials. Of those two materials, which have similar chemical compositions and the same design stress intensities in the ASME Code, the SA 508 Grade 3 Class 1 forging is preferred to eliminate the need for axial welds. It is also desirable to fabricate a forging of sufficient height to keep circumferential welds outside the region adjacent to the reactor core (the so-called beltline region) and preliminary information from the Japan Steel Works indicates that it will probably be possible to do so.

The knowledge gained over the past few decades regarding the radiation embrittlement of current LWR materials must be utilized in the preparation of the material specifications for the RPV materials. For example, minimization of sensitizing elements such as copper and phosphorus is critical for mitigation of embrittlement and undesirable segregation, while the nickel content should be kept relatively low yet high enough to maintain the strength and fracture toughness of the A508 Grade 3 Class 1 steel. In this regard, the thickness of the SCWR vessel shell and nozzle course forgings may present difficulties. Therefore, special attention must be paid to the chemical composition and heat treatment specifications to allow for through-thickness hardening to maintain the necessary strength and fracture toughness, yet to also ensure minimization of radiation embrittlement sensitivity.

Similar to the RPV shell, the RPV bolted closure head and welded bottom head will operate at 280ºC and the materials of construction will be similar. The materials and fabrication of the heads, including the control rod drive mechanism housings, head bolts, etc. will incorporate the latest materials of choice for current LWRs and currently designed advanced LWRs. Information regarding RPV supports is not yet available and the choice of materials will depend upon the specific design.

If the design cannot incorporate an insulated nozzle, the material choices for the RPV shell, heads, and nozzles must be different than those discussed above because part of the vessel would operate at 500ºC. In this case, the design feasibility of a separate nozzle course insulated from the lower shell course and bolted head should be determined. If such a configuration is not feasible, then the use of a Cr-Mo alloy that maintains strength to higher temperatures would be required for the RPV. A vast amount of experience exists in the non-nuclear industry for long-time operation in this higher temperature range for 2 1/4Cr-1Mo steel, some experience with 3Cr-1Mo, and less with 9Cr-1Mo. An exacerbating issue in this case is that the portion of the vessel shell exposed to significant irradiation may operate at temperatures from 280 to 500ºC, depending on the specific design. Thus, if the current design changes to incorporate an integral nozzle, the issues regarding the RPV would be different and more uncertain relative to material behavior, and would likely require significantly more development and qualification efforts than associated with the current insulated nozzle design. However, as stated earlier, for the purpose of this current plan, it is assumed that an insulated nozzle will be accommodated in the design.

Regarding the thickness of the RPV shell, consideration should also be given to the potential use of higher strength materials that could result in a significant decrease of the required reactor pressure vessel wall thickness. There are a number of advantages that would accrue with a steel of significantly higher strength:

(1) Given the same design pressure, use of a steel with a 50% higher strength would allow for more than a 30% reduction in shell thickness;
(2) Thinner sections allow smaller ingots to be cast;
(3) Thinner plates or forgings ensure more uniform compositions and properties in the final product after heat treatment and hot-rolling or forging;
(4) Given the capacity, even larger-height forgings can be fabricated;
(5) Heat treatment of thinner sections is easier (more economical), and thinner sections can be cooled more rapidly, thus ensuring a more uniform through-thickness microstructure;
(6) During plant fabrication, thinner sections would offer advantages in material handling, welding, and vessel transportation;
(7) Thinner sections are easier to inspect, the results are more reliable, the probability of flaw detection is enhanced, and the flaw density would likely be lower; and
(8) If extremely large vessels are designed, thinner sections would be more amenable to field fabrication.

Two potential materials are A508 Grade 4N Class 1 and a developmental steel, 3Cr-3WV. The A508 Grade 4N Class 1 forging is a generally bainitic (typically lower bainite) steel with a minimum specified yield strength of 585 MPa (85 ksi) compared with 344 MPa (50 ksi) for the A508 Grade 3 Class 1 forging discussed above. Thus, the design stress intensities would likely be about 70% higher for that alloy. Although that steel contains about 3.5 wt% nickel, irradiation results near to that of the SCWR operating temperature of 280ºC indicate it could be suitable from the standpoint of irradiation resistance. The A508 Grade 4N typically has a 41-J Charpy temperature below –100ºC that could be lowered to below –150ºC with an upper-shelf energy greater than 275 J (200 ft-lb) by enhanced control of tramp elements such as, phosphorus, sulfur, arsenic, and antimony, as well as manganese and silicon.

The 3Cr-3WV steel mentioned is a “reduced-activation” low alloy steel with a base composition of nominally Fe-3Cr-3W-0.25V-0.1C. Preliminary tests on the steel indicate that this bainitic steel develops a combination of strength and toughness that would appear to make it a suitable candidate for pressure vessels, piping, and other pressure boundary components of Generation IV reactors. The steel is presently being investigated as a possible replacement for 2 1/4Cr-1Mo and modified 9Cr-1Mo steels in the petrochemical and power-generation industries. In the section sizes investigated to date, the 3Cr-3WV steel has strength more than double the 345 MPa (50 ksi) used to design with the A533B steel. Additionally, the Charpy impact toughness of the steels is as good or better than that of A533 grade B class 1 plate.

3.2.2.1 Expected Research, Testing, and Qualification Needs for SCWR RPV Materials

For the current design, achievement of the required through-thickness mechanical properties needs to be demonstrated. Such a demonstration would consist of the full range of mechanical properties, tensile, Charpy impact, drop-weight, and fracture toughness testing through the thickness, including appropriate metallographic evaluation of the microstructure. Additionally, nondestructive inspections prior to the destructive evaluations should be conducted and coordinated with the destructive evaluations to demonstrate soundness of the forging through the thickness.

If the significant SCWR fatigue component in excess of that for current LWRs is demonstrated, then fatigue data will be required to demonstrate structural adequacy for the forging and the welds. Similarly, if the water chemistry of the water exposed to the RPV is different than that for current LWRs, environmental assisted fatigue crack growth data for the forging, weld metal, and stainless steel cladding at the operating temperature and in the water environment will be required.

Initially, both the A508 Grade 4N Class 1 and 3Cr-3WV steels will be investigated at low level with in the SCWR materials program to provide a backup for the traditional LWR vessel materials in case, inadequate through-thickness properties or other unexpected issues limit their use as well as to establish the viability of their use for reducing fabrication and construction costs of SCWR reactors. Both experimental and analytical studies would need to be conducted to evaluate the hardenability of those steels relative to that of A508 Grade 3 Class 1. In the case of the A508 Grade 4N steel, relatively thick section data are available and a literature review will be conducted to assess the specific needs relative to the viability of that material for the SCWR application. Given the results from those studies, the evaluations would proceed to fabrication of heavy-section forgings of sufficient thickness to assess the potential for one or both of the steels to be considered viable candidates for the RPV material. If these preliminary studies indicate such viability,

If they are considered viable and desirable, an assessment would also be made regarding inclusion of one or both of those steels in a comprehensive material evaluation program that would include all the mechanical and physical properties needed for inclusion in the ASME Boiler and Pressure Vessel Code. This would include a full range of mechanical properties, including strength, toughness, fatigue, and creep, in the metallurgical condition representative of that for the anticipated section size, including welds. Likewise, the effects of irradiation on the strength and fracture toughness to an exposure beyond that predicted for the SCWR RPV would be required.

3.2.2.2 Experimental RPV R&D Plans

A brief summary of major R&D activities and schedules for the SCWR RPV materials is provided below. The development tasks for the RPV are dependent on 1) the incorporation of an insulated outlet nozzle to maintain the RPV shell nominal operating temperature at 280ºC, and 2) consideration of optional higher strength materials to reduce the RPV shell thickness. In the first case, the required tasks and costs are relatively low for the 280ºC RPV operating temperature, while they would be significantly higher for an operating temperature of 500ºC associated with an integral hot nozzle (costs not estimated for this report). For the second case, the total tasks and costs are substantial for the necessary developmental costs, but the potential advantages for fabrication and operation of the RPV are significant. The tasks and schedules below assume RPV fabrication with current LWR RPV steels but include a preliminary evaluation program for development of higher strength steels.

The schedule for these tasks is not well defined because it is highly contingent upon funding availability, which is not known at this time. It is, however, laid out as though the required funding would be available to meet the earliest logical schedule of the tasks identified and it will be subject to revision, based on actual funding availability.

Milestones

FY 2006

- Evaluate steel making and fabrication capabilities for RPV design with current LWR RPV steels
- Initiate demonstration of fabrication capability for RPV thickness
- Perform detailed review and assessment of data for optional higher strength RPV steels

FY 2007

- Initiate preliminary testing of optional high strength steels in thick sections
- Initiate preliminary radiation effects and thermal aging testing
- Begin fabrication of irradiation experiments for reactor internals prime candidate materials for SCWR
- Prepare progress report on demonstration of RPV fabrication capabilities for SCWR

FY 2008 and 2009

- Initiate demonstration of welding and NDE capability for optional high strength steels
- Initiate development of procedures for application of stainless steel cladding to optional high strength steels
- Assess higher strength RPV steels together with manufacturers capabilities, prepare report for SCWR
- Begin fabrication studies of higher strength RPV steels for SCWR
- Initiate radiation effects and thermal aging studies of higher strength RPV steels for SCWR

FY 2010 and beyond

- Complete preliminary testing of optional high strength steels in thick sections
- Complete development of procedures for application of stainless steel cladding to optional high strength steels
- Complete demonstration of fabrication capability for RPV thickness
- Complete preliminary radiation effects and thermal aging testing
- Complete demonstration of welding and NDE capability for optional high strength steels
- Prepare progress report on fabrication results for thick section fabrication on conventional RPV steels for SCWR
- Place specimens of higher strength RPV steels in reactor for SCWR
- Complete demonstration of fabrication capability for thick-section conventional RPV steels, write comprehensive report for SCWR
- Prepare final report on all tests of higher strength of RPV steels for SCWR
- Initiate development of procedures for cladding of higher strength steels for SCWR
- Complete final reports on radiation effects and thermal aging of higher strength RPV specimens and on procedures for cladding of higher strength RPV steels for SCWR

3.2.3 RPV Internals Materials Selection and Issues

The greatest materials challenge presented by the SCWR will be qualification of materials for service within the vessel that see both high temperature and radiation exposure and must simultaneously survive the relatively aggressive supercritical water environment. The present section identifies the structural materials that are candidates for the components of the core and of the associated support structures and addresses the principal issues related to their selection and performance. In the first category are the fuel cladding, fuel rod spacers (spacer grid or wire wrap), water rod boxes, fuel assembly ducts, and control rod guide thimbles. The second category includes control rod guide tubes, the upper guide support plate (UGS), calandria tubes,

upper core support plate (UCS), lower core plate (LCP), core former, core barrel, and threaded structural fasteners. Insulation materials will also be needed for the reactor pressure vessel internals components that separate the hot outlet coolant (about 500°C) from the inlet coolant (280°C). These materials have not yet been adequately identified and, therefore, are not discussed in this section.

Table 20 lists the in-core components together with summaries of the anticipated irradiation conditions and mechanical loads for normal operating conditions, as well as the temperature excursions expected for abnormal conditions. Also listed are materials typical of those in use for similar components in currently operating PWRs and boiling water reactors (BWRs). The last two columns of the table provide recommendations for potential candidate materials for the SCWR, together with brief notes to further explain or augment other entries in the table. Table 21 follows an identical format for the support structures. An approach to further the down-selection of prime candidates is described based on combined evaluations in supercritical water and under irradiation.

Table 20. Operating conditions and candidate materials for the in-core reactor components of the SCWR. All components listed are part of replaceable fuel assembly.

Component	Normal Conditions			Abnormal Conditions	Current LWR Mtls		Candidate SCWR Materials	Notes
	Temperature [1]	Peak Dose [2]	Loads [3]	Temperature [4]	PWR	BWR		
Fuel cladding	280-620 ºC	15 dpa	Pressure drop across cladding, grid-cladding and fuel-cladding interactions σ up to 100 MPa	Up to 840°C for <30 sec	Zircaloy 4	Zircaloy 2	Fe-Ms, Low-swell S.S.	
Spacer grids/wire wrap	280-620 ºC	15 dpa	Hold the fuel pins together	Up to 840°C for <30 sec	Zircaloy 4, Inconel 718	Zircaloy 4, Inconel X750, 304 S.S.	Fe-Ms, Low-swell S.S.	
Water rod boxes	280-300 ºC inner 280-500 ºC outer	15 dpa	ΔP<0.1 MPa	Up to 700°C for <30 sec	N/A	Zircaloy 2	Fe-Ms, Low-swell S.S.	May need to insulate.
Fuel Assembly duct	280-500 ºC inner 280-300 ºC outer	15 dpa	ΔP<0.1 MPa	Up to 700°C for <30 sec	N/A	Zircaloy 4	Fe-Ms, Low-swell S.S.	May need to insulate.
Control Rod Guide Thimble	280-300 ºC	15 dpa	Low hydraulic and thermal stresses	280 - 300°C	Zircaloy 4	N/A	Zircaloy 4, Zr-Nb alloy	Zr alloy selected for superior neutron economy.
1. Peak temperatures in PWRs are 320-370°C 2. Design estimates for typical high burnup LWR fuel 3. In addition, all reactor internals will be subject to seismic and pipe break loads. 4 Condition II events only (LOCAs, LOFAs, ATWSs are excluded)	Fe-Ms (Ferritic-Martensitic) steels, e.g., T91 (9Cr-1Mo-V), A-21 (9Cr-TiC mod), NF616 (9Cr), HCM12A (12Cr), 9Cr-2WVTa, MA-957. Existing low-swell stainless steels, e.g., D-9 (14.5Cr-14.5Ni, 2Mo, Ti stab), PNC ~D-9 mod w/P).							

Table 21. Operating conditions and candidate materials for the core structural support reactor components of the SCWR.

Component	Normal Conditions			Abnormal Conditions	Current LWR Mtls		Candidate SCWR Materials	Notes
	Temperature [1]	Peak Dose [2]	Loads [3]	Temperature	PWR	BWR		
Upper Guide Support (UGS) plate	280 ºC upper 500 ºC lower	0.021 dpa	Significant hydraulic and thermal loads	Lower side at up to 700°C for <30 sec	304L S.S	304L S.S.	Advanced S.S., Fe-Ms	Must insulate between the region above the core (500°C) and the upper plenum (280°C) to limit the thermal loads in the UGS.
Calandria Tubes	280 ºC inner 500 ºC outer (w/o insulation)	0.021 dpa	Significant hydraulic and thermal loads	280°C inner 700°C outer	N/A	N/A	Advanced S.S., Fe-Ms	Must insulate to limit the heat transfer from the coolant to the moderator and control the thermal loads in the calandria tubes.
Upper Core Support (UCS) plate	500 ºC	0.021 dpa	Significant hydraulic. Moderate thermal.	Up to 700 ºC for <30 sec	304 S.S.	304, 304L, 316 S.S.	Advanced S.S., Fe-Ms	The water rod box penetrations may cause some locally high thermal stresses.
CR guide tubes	280 ºC	0.00001 dpa	Low hydraulic. Low thermal.	N/A	304 S.S.	304 S.S.	Advanced S.S., Fe-Ms, 304L, 316L	May want to use the same material as for the UGS, UCS, and calandria tubes
Lower core plate	280-300 ºC	0.39 dpa	Significant hydraulic. Low thermal. Supports core.	N/A	304L S.S	304L S.S.	Advanced S.S, Fe-Ms, 304L, 316L	May want to use the same material as for the UGS, UCS, and calandria tubes
Core Former	~280-600 ºC	67.1 dpa	Significant hydraulic. High thermal.	700ºC	304 S.S.	N/A	Fe-Ms, Low-Swell S.S.	Must insulate either the core former or core barrel to control the thermal loads in the barrel.
Core barrel or shroud	280ºC core region, 500 ºC above core	3.9 dpa	Significant hydraulic. High thermal.	N/A	304L S.S	304L S.S.	Fe-Ms, Low-Swell S.S.	Must insulate the core barrel above the core region and insulate either the core barrel or core former in the core region.
Threaded fasteners	280-500 ºC	< 4 dpa [4]			316 S.S./CW	304, 600, 316, 316L	Advanced S.S., IN-718, 625, 690	The current design is an all welded core former and barrel.

1. Peak temperatures in PWRs are320-370°C
2. Design estimates for 60y
3. All reactor internals will be subject to seismic and pipe break loads
4. ~ 50 dpa for baffle bolts and formers in PWRs

Fe-Ms (Ferritic-Martensitic) steels, e.g., T91 (9Cr-1Mo-V), A-21 (9Cr-TiC mod), NF616 (9Cr), HCM12A (12Cr), 9Cr-2WVTa, MA-957.
Existing low-swell stainless steels, e.g., D-9 (14.5Cr-14.5Ni, 2Mo, Ti stab), PNC ~D-9 mod w/P). Advanced stainless steels, e.g., HT-UPS (~PNC), AL-6XN (20Cr-24Ni-6Mo-0.2Cu-0.2N), etc.

There is substantial experience with commercial compositions of austenitic stainless steels and some high nickel alloys in currently operating light water reactors. Typically these components operate at temperatures well below the temperatures at which significant swelling occurs, so that swelling has not been a major problem. However there has been some concern regarding possible swelling in low temperature/low dose rate regimes. Of much greater concern has been the failure of components, after many years in both BWRs and PWRs, as a result of irradiation assisted stress corrosion cracking (IASCC) in both stainless steels and high nickel alloys.

Where temperatures significantly above 300ºC or doses above several dpa are expected, as in the SCWR reactor internals, the structural materials recommended in both Tables 20 and 21 are primarily ferritic-martensitic steels and low swelling variants of austenitic stainless steels. For these conditions austenitic stainless steels, such as AISI 304 and 316, which have not been tailored for low swelling, cannot be used. The swelling behavior of both alloys is sensitive to small changes in heat-to-heat chemistry and significant dimensional changes in the reactor internals can occur even at doses of ~15 dpa.

The range of compositions within the Fe-Cr-Ni alloy system within which alloys with acceptable mechanical behavior and dimensional stability currently exist, or could be developed, may be divided into four broad categories namely, a) austenitic stainless steels, b) ferritic-martensitic steels, c) high alloys (Fe < 50 wt.%) and d) Ni-based alloys.

Within the austenitic stainless steel family, compositional options include:

a) Composition-restricted 316 stainless steels with nitrogen modifications such as the French breeder program 316 and the Japanese 316 FR,
b) 316- type stainless steel micro-alloyed with Ti, B and P, such as the Japanese PNC 316 alloy (although B is not a desirable alloying element in reactors), and D9 modifications,
c) High nitrogen austenitic and possibly duplex (austenite/ferrite) steels, and
d) Steels containing Cr and Ni in the 20-30% range such as Al-6XN, and the US HT-UPS alloys.

Many of the improved stainless steels identified in Tables 20 and 21 have been produced in a variety of product forms on a commercial scale. However, there is little basis at present for predicting the behavior of any of these materials in terms of their stress corrosion cracking and irradiation-assisted stress corrosion cracking behavior under supercritical water conditions which are the greatest unknowns that will affect their performance in the SCWR. Compositions are available that have demonstrated low swelling up to doses of 50-100 dpa in both mixed spectrum and fast reactors in the temperature regime of highest swelling in non-tailored alloys, i.e., 450 -550ºC. It should be noted that many of the low swelling alloys also exhibit superior creep strength relative to 316 stainless steel. The low carbon versions of 304 and 316 are not considered for low dose applications because of their poor resistance to IGSCC. However, samples of both these alloys should be included in the program to serve as benchmarks against which to compare performance of the newer alloys.

Ferritic-martensitic steels in the 9-12 % Cr range are intrinsically more swelling resistant than austenitic steels. Low swelling has been demonstrated at doses of 50-100 dpa in neutron irradiations. The early commercial model for these alloys for applications to reactor internals was the Alloy HT-9, containing 12 % Cr and 1 % Mo produced by Sandvik. Newer alloys that show better properties are based on 9 % Cr 1 % Mo such as T91 and a series of reduced activation alloys in which the Mo and Nb are replaced with W, V, and Ta, such as the Japanese

F82H and the U.S. 9Cr-2WVTa alloy. Additionally, steels such as NF616 and HCM12A from Japan and E911 from the EU have been developed for 620ºC operation.

A class of advanced ferritic steels that has received considerable interest for nuclear applications in recent years is the ODS steels. In these ODS steels, the cubic-centered structure provides the irradiation swelling resistance while the dispersed oxides (e.g., yttrium oxides) provide enhanced high-temperature strength. The high-temperature creep strength of these alloys is exceptional, i.e., at 650°C it can be three to four times larger than for the traditional ferritic-martensitic steel HT-9. Some grades of this class of alloys exhibit low ductility and large anisotropy in creep strength, but these shortcomings may be eliminated by careful selection of the alloying elements. Significant international activities are ongoing to optimize this class of materials, particularly in Japan.

The main issues with all ODS alloys relatively to their application in the SCWR are (i) significant uncertainties regarding their compatibility with the supercritical-water coolant, (ii) high cost of fabrication and (iii) weldability. Nevertheless, because of their potential inclusion of some ODS alloys (e.g., MA957) are recommended in the SCWR materials development program.

For the control rod thimbles, Zircaloy 4 or a zirconium-niobium alloy is recommended based upon proven performance in LWRs at the anticipated low operating temperatures (about 300ºC) and their very low thermal neutron absorption cross section.

In several cases the high nickel alloys have been recommended as alternates to the steels. Their swelling behavior may be acceptable up to reasonably high doses. However, these alloys should be considered only if it is found that low-swelling austenitic steels or the ferritic-martensitic class of alloys do not perform satisfactorily in the supercritical water environment or do not have sufficient strength for applications such as threaded structural fasteners.

3.2.3.1 Expected Research, Testing, and Qualification Needs for SCWR RPV Internals Materials

The corrosion and stress corrosion cracking (SCC) behavior of alloys in supercritical water will be the dominant feature of the initial phases of the R&D program. For the four broad categories of alloys to be considered as candidates for the reactor internal components, namely austenitic stainless steels, ferritic-martensitic steels, high alloys (Fe < 50 wt.%), and nickel-based alloys, there is insufficient knowledge at present regarding their behavior in supercritical water to rank these alloy categories in terms of overall corrosion resistance.

The materials program for the reactor internal components will comprise two distinct but overlapping activities: research and development activity to define a limited number of prime candidate alloys and a materials engineering design data activity. The first activity entails a sequenced set of testing and performance evaluation stages over an initial 7-year time frame in which an initially large number of potential candidate materials is reduced to a limited number of prime candidates through exposure to, and testing in, increasingly complex and hostile environments. This R&D program is intended to ensure the viability of the SCWR. It will produce the technical data that defines alloy compositions and thermo-mechanical treatments with the demonstrated capability to meet the intended service conditions of the major reactor internal components. The second activity involves a more extensive evaluation and qualification of the prime candidates to develop a materials engineering design database of sufficient breadth and depth to meet code case and licensing requirements. This would encompass

repetitive testing to establish confidence limits, and development of information on heat-to-heat variations and on various product forms including welds.

Based on this initial screening phase work, a reduced number of materials exhibiting promising behavior will be selected for the second phase of the R&D program which will include a) SCC initiation and crack growth rate measurements of irradiated materials, utilizing material subjected to neutron and proton sources, coupled with exposure to simulated SCC water chemistry conditions and b) a series of neutron irradiation experiments to establish the mechanical behavior and dimensional stability of candidate alloys as a function of neutron dose and irradiation temperature. Relatively simple irradiation capsules (e.g., HFIR rabbit-type) could be used to produce large numbers of specimens irradiated to doses up to ~23 dpa for post irradiation tests in supercritical water conditions. Accelerator-based irradiations with ~ 3 MeV protons also provide a means of introducing displacement damage and microstructural changes, from which important information can be derived on the mechanisms of IASCC phenomena and provide guidance on the selection of alloys and metallurgical conditions.

The primary component of the third phase of the R&D program will be the testing of a reduced number of promising candidate materials in a super critical water (SCW) loop to obtain data on corrosion and IASCC resistance in prototypical conditions and provide important water chemistry control data.

The irradiation test program has two aspects: a) the investigation of susceptibility to IASCC phenomena and b) the establishment of the constitutive behavior for creep, swelling, ductility fracture toughness, etc. These two separate irradiation experiment activities may be coupled to some extent. To investigate the susceptibility of materials to IASCC under supercritical water conditions, it is obviously desirable to simulate reactor environmental conditions by exposing materials to the simultaneous effects of displacement damage, ionizing radiation, and stress in a supercritical water environment. This type of environment is difficult to achieve. It is therefore necessary instead to rely on a variety of testing methods and conditions that reproduce to some extent the primary features of the environmental conditions that control corrosion and cracking phenomena.

Supercritical water conditions, ranging from the low temperature inlet conditions in the SCWR around 280ºC up to the higher temperature regimes above the pseudo-critical point, where the coolant changes from being essentially a compressed liquid to a fluid (gas) of nearly an order of magnitude lower density. The effects of oxygen, hydrogen and other impurity concentrations on the corrosion and SCC behavior of each material needs to be studied and information is needed on both the susceptibility to crack initiation and on the crack growth behavior. A fully integrated, complementary program on the effects of radiolysis on the supercritical water chemistry is essential in order to provide information on the radiolytic yields and their recombination rates as a function of density and temperature.

Relatively simple irradiation capsules (e.g., HFIR rabbit-type) may be used to produce large numbers of specimens irradiated to doses up to ~5 dpa for post irradiation controlled extension rate tests (CERT) in supercritical water conditions. Although the radiation damage is de-coupled from the other environmental factors, this approach has the advantage of conducting cracking tests in laboratory controlled environments using information on water chemistry derived from separate experiments on radiolysis.

This type of relatively inexpensive irradiation as well as accelerator-based irradiations with ~3 MeV protons could also be used to provide low dose specimens for the investigation of

microstructural and microcompositional evolution. Following irradiation, specimens can be mechanically loaded in well-controlled SC water chemistry environments to investigate cracking susceptibility.

In addition to the irradiation of specimens in helium-filled capsules for post irradiation controlled extension rate tests (CERT) in supercritical water conditions, it may also be possible to develop an environmental capsule with in-situ monitoring of radiolytic species and chemical corrosion potential, in which the materials are irradiated in contact with water in sealed high-pressure containers. The ongoing irradiation would produce continuous radiolysis leading to products such as oxygen and hydrogen as well as other products such as peroxide that are implicated in IASCC. These specimens could be further tested following irradiation under controlled CERT conditions as above.

None of the irradiation methods mentioned above is an exact duplication of conditions in the SCWR. The neutron irradiations in gas capsules and the proton irradiations in vacuum fail to introduce radiation effects simultaneously with corrosion and/or stress corrosion cracking processes. In addition, the proton irradiations do not introduce radiation damage with consequent changes in properties throughout a specimen, but only affect regions within tens of micrometers of the proton entry surface. In contrast, the neutron irradiations in water capsules do include simultaneous exposure of specimens to irradiation and an oxidizing environment. However, neutron irradiations of closed water capsules suffer in comparison to an exposure in a flowing loop in that the water chemistry is constantly changing in a manner that cannot be easily measured. The problem can be minimized by introducing pH and electro chemical potential (ECP) probes and by employing as large a capsule as possible natural circulation to provide a low flow rate of refreshed supercritical water.

The water capsules are being considered specifically for the SCWR project and are not known to have been used before. For this reason the neutron irradiations in water capsules will be subject to an evaluation phase prior to committing to the full cost of including them in the program.

Based upon a judicious use of these and possibly additional techniques, it is intended to reduce the number of candidate material conditions to a small number of prime candidate alloys for comprehensive testing and evaluation in a pumped loop facility in a test reactor so as to more closely achieve prototypical conditions in flowing supercritical water. However, it should be noted that even such a loop may not completely reproduce the SCWR environment. There is expected to be no truly prototypical environment available until the SCWR itself begins operation. It will therefore be necessary to include provisions for the SCWR to include an advanced materials irradiation program, in addition to a surveillance program, with capabilities to irradiate specimens of candidate structural materials for possible improvements in subsequent cores or structures and for next generation SCWRs.

Materials showing promise of acceptable performance in supercritical water will be the focus of an irradiation testing program to determine a full range of mechanical behavior and physical properties. Properties to be determined include tensile, creep, fatigue, fracture and microstructural and dimensional stability. The irradiations will be carried out to a recommended 150% of the nominal expected dose of 15 dpa.

The phased R&D program will result in the identification of a limited number of prime candidate materials with the potential to meet the requirements of all in-vessel components. The program will then make a transition into a materials engineering activity, which will provide the extensive

materials property database required for design, licensing construction and operation. The product of this phase will be a specification for producing materials in the required product forms, an approved data base on properties, the structural assessment methods required to support design, construction, and licensing, and a reliable basis for the prediction of materials performance throughout the expected lifetime including off-normal events.

3.2.3.2 Experimental Reactor Internals Materials R&D Plans

A brief summary of R&D plans and schedules for the SCWR reactor internal materials is provided below. The tasks are intended to provide the information needed to quantify the influence of supercritical water, irradiation, and high-temperature exposure on the corrosion, SCC, and IASCC resistance of materials candidates for the power conversion, as well as their long term stability.

The schedule for these tasks is not well defined because it is highly contingent upon funding availability, which is not known at this time. It is, however, laid out as though the required funding would be available to meet the earliest logical schedule of the tasks identified and it will be subject to revision, based on actual funding availability.

Milestones

FY 2005

- Perform initial corrosion and SCC screening tests of unirradiated materials in supercritical water
- Select samples from irradiated archival material for evaluation screening tests of SCC in supercritical water
- Complete development and installation of SCC test facility for irradiated materials

FY 2006

- Initiate determination of unirradiated mechanical properties data for candidate materials
- Complete corrosion and SCC screening tests of unirradiated materials in supercritical water
- Initiate evaluation of SCC on ion irradiated and archival neutron irradiated materials
- Initiate corrosion and SCC testing of primary candidate materials for core support components in supercritical water at simulated in-reactor chemistry
- Complete compilation of available information on solubility of SCWR power conversion systems candidate materials in supercritical steam
- Initiate measurements of solubility of SCWR candidate materials in supercritical steam

FY 2007 and 2008

- Complete compilation, evaluation and new testing for unirradiated mechanical properties data for reactor internals for SCWR
- Complete corrosion and SCC testing of primary candidate materials for core support components in supercritical water at simulated in-reactor chemistry
- Complete fabrication and place first irradiation experiments into reactor for SCWR

- Initiate post-irradiation mechanical properties testing, microstructural characterization of replaceable fuel assemble candidate materials
- Initiate post-irradiation corrosion and IASCC testing in supercritical water testing of replaceable fuel assemble candidate materials
- Prepare final report on unirradiated mechanical properties for SCWR
- Complete measurements of solubility of SCWR candidate materials in supercritical steam
- Complete corrosion and SCC testing of primary candidate materials for SCWR core support components in supercritical water
- Initiate post-irradiation corrosion and IASCC testing of SCWR core support materials in supercritical water

FY 2009 and 2010

- Complete post-irradiation mechanical properties testing, microstructural characterization of replaceable fuel assemble candidate materials
- Complete testing and write final report on corrosion and SCC tests on unirradiated materials in supercritical water for SCWR
- Remove first low-dose core structural material specimens from reactor, evaluate mechanical properties and corrosion for SCWR
- Complete facility construction for irradiation of SCWR candidate materials in pumped flow loop for corrosion and IASCC testing in supercritical water
- Remove intermediate dose structural material specimens from reactor, carry out extensive mechanical property, microstructural and corrosion characterizations for SCWR

Beyond FY 2010

- Initiate irradiation of candidate materials in supercritical pumped flow loop, post-irradiation mechanical properties testing, microstructural characterization, and corrosion and IASCC testing in supercritical water
- Complete post-irradiation corrosion and IASCC testing in supercritical water testing of replaceable fuel assemble candidate materials
- Complete irradiation of candidate materials in supercritical pumped flow loop, post-irradiation mechanical properties testing, microstructural characterization, and corrosion and IASCC testing in supercritical water
- Complete final report on corrosion and SCC tests with simulated in-reactor chemistry for SCWR

3.2.4 Pump, Piping, and Valve Materials Selection and Issues

The issues and concerns regarding the pumps, valves, and piping for the SCWR can be divided into those associated with the feedwater lines and the steam lines.

Issues for components of the feedwater system will be similar to those being considered in the more conventional advanced LWR technologies, where ASME Section III is the applicable construction code. A wide selection of materials is available in ASME Section III, although the choices for the SCWR may be different for Class 1 components than for Class 2 and Class 3 components. Valves in the feedwater lines can be manufactured from materials similar to pump casings. The choice between ferritic steels and stainless steels for the feedwater line piping must consider the chemistry of the water and the potential for flow assisted corrosion. Experience has shown that flow-assisted corrosion (FAC) is the dominant degradation mechanism of LWR piping system. Also, fatigue and stress corrosion cracking are concerns. Carbon steels piping materials in operating LWRs, such as seamless pipe SA-106 Grade C, clad carbon steels, and seamless stainless steels pipes such as SA-312 TP304H, TP304L, TP316L are the primary candidate materials for the feedwater lines. Of these many materials, the grades that have been included in the LWR environmental strain-fatigue and fatigue crack growth studies would be preferred. Although seam welded piping has been installed in LWRs, it should be avoided unless the piping has been subsequently reworked and renormalized. Wrought products should be preferred over cast products.

The SCWR feedwater pumps will be low flow/high head pumps located on the feedwater lines outside the containment and are expected to operate at approximately 190°C. These pumps will resemble in many ways the state-of-the-art pumps developed for supercritical fossil power. The materials candidates for pump casing are a forged low-alloy steel, such as SA-508 Class 2 or Class 3. An austenitic cladding with controlled delta ferrite content would be required if a low-alloy steel is selected. Alternatively, an austenitic stainless steel such as SA-336 Gr F304 could be considered. The materials candidates for pump internals are a high-strength casting such as SA-487 CA-6NM-A (normalized and tempered 13Cr-4Ni steel).

The steam line piping is the greater concern. The issues related to the steam line system are more akin to those addressed in the design, construction, and operation of supercritical fossil power plants. Creep and time-dependent material degradation are active in fossil plant steam line systems at temperatures above 370°C for ferritic steels and above 425°C for austenitic alloys. The philosophy behind the ASME Power Piping Code (B31.1), which covers fossil plant piping, is significantly different from the philosophy of ASME Section III

The outlet temperature of 500°C is less than the temperature at which many supercritical fossil power plants operate, but the pressure (25 MPa) is comparable. Whereas ASME Section III has incorporated a wide selection of ferritic piping steels for service to 370°C and austenitic alloys for service to 425°C the high-temperature extension Subsection NH is limited to Grade 22 Class 1, Grade 91, and three austenitic alloys (304H stainless steel, 316H stainless steel, and Alloy 800H). The steam line temperature is sufficiently low to enable the use of one of these materials, providing that FAC is not a problem. Alternate materials would include 316FR stainless steel. This steel qualifies as an “L” grade, yet has properties equivalent to, or superior to, Type 316H stainless steel. The database is sufficient to meet the needs for inclusion into Subsection NH.

The steam line piping system between the isolation valve and the turbine could be designed to meet the requirements of B31.1, which would allow a greater choice of materials, allowing the use of alloy P92 (9Cr-2W), which is used in fossil-fired supercritical plants. However, supplementary requirements to address fatigue and other damage accumulation mechanisms would be needed.

3.2.4.1 Expected Research, Testing, and Qualification Needs for Pump, Piping, and Valve Materials

A number of issues are expected as a result of the 60-years intended life of the SCWR, based on experiences of the fossil power piping systems in the last 20 years. Fossil plants have experienced cracking in welds in 316N stainless steel piping and in thick-section dissimilar metal welds after more than 100,000 hours of operation with steam at 540°C. Aging effects and the performance of weldments and seam welded piping, must be addressed from a Code and reliability standpoint.

The compatibility of the materials with the coolant water must be evaluated. A database that includes the operating experiences of pumps operating in the pressure range of interest should be assembled and utility experience brought to bear on issues regarding pump maintenance and reliability. The potential for fatigue, corrosion fatigue, and fatigue crack growth of a flawed component needs to be assessed.

The extensive database collected on the candidate piping materials should be re-evaluated in light of the specific environment and operating conditions of the SCWR. The long-time data produced in the time period since ASME Subsection NH should be incorporated into the re-evaluation of the time-dependent allowable stresses and stress intensities. A careful review of the factors contributing to cracking in weldments should be undertaken and techniques to accelerate damage mechanisms should be developed. The fitness-for-service assessment methodology developed by the Metals Properties Council should be expanded to include a continuum damage mechanics model suitable for high temperature applications. Factors such as microstructural coarsening, cavitation, and wastage will be accommodated by the model to predict remaining life of a component exposed to long-time, high-temperature service.

3.2.4.2 Experimental R&D Plans for Pump, Piping, and Valve Materials

A brief summary of R&D plans and schedules for the SCWR pump, piping and valve materials is provided below. The schedule for these tasks is not well defined because it is highly contingent upon funding availability, which is not known at this time. It is, however, laid out as though the required funding would be available to meet the earliest logical schedule of the tasks identified and it will be subject to revision, based on actual funding availability.

Milestones

FY 2006

- Complete compilation of available information on solubility of SCWR power conversion systems candidate materials in supercritical steam
- Initiate fatigue, thermal fatigue, and fatigue crack growth testing in simulated supercritical water at simulated chemistry
- Initiate development materials data needed to modify ASME and related construction codes for extended life and new materials
- Initiate corrosion fatigue testing for SCWR pump materials in supercritical water

- Initiate evaluation of factors affecting steam condensation and stability of corrosive species in SCWR power conversion systems
- Perform FAC and corrosion fatigue testing for pump materials in supercritical water at simulated chemistry
- Initiate evaluation of potential for creep-fatigue, thermal fatigue, and dissimilar metal weld cracking of steam line piping valves
- Initiate development of continuum damage models for steam line piping materials

FY 2007 and 2008

- Perform FAC and corrosion fatigue testing for valve materials in supercritical water at simulated chemistry
- Initiate evaluation of potential for dissimilar metal weld cracking in steam line piping
- Initiate corrosion fatigue testing for valve materials in supercritical water at simulated chemistry for SCWR

FY 2009

- Complete evaluation of potential for creep-fatigue, thermal fatigue, and dissimilar metal weld cracking of steam line piping valves

FY 2010 and beyond

- Complete fatigue, thermal fatigue, and fatigue crack growth testing in simulated supercritical water at simulated chemistry
- Complete development materials data needed to modify ASME and related construction codes for extended life and new materials
- Complete development of continuum damage models for steam line piping materials
- Complete evaluation of potential for dissimilar metal weld cracking in steam line piping

3.2.5 Power Conversion System Materials Selection and Issues

In this section of the plant, steam at about 500°C and 25 MPa is supplied from the reactor, expanded through the turbine, condensed, cleaned, pumped to 25 MPa, and then heated to 280°C before re-entering the containment and reactor vessel. The major components of the PCS are external to the reactor vessel and include the steam turbine and associated valving; the condenser; the demineralizer/condensate polisher; the feedwater preheaters; and the deaerator.

3.2.5.1 Turbines

Fossil-fired supercritical steam power plants operate with steam conditions typically of 540 to 600°C and 25 to 30.5 MPa. As a result, there is a well-established manufacturing base for turbines for operation at the supercritical steam conditions of interest in the SCWR, as well as extensive experience in their use. The extent to which this experience is relevant to the SCWR case largely depends on similarities and differences in the quality of the steam, in particular, the extent to which the level and types of impurities in the steam are different from those in fossil-fired practice. One difference is that, whereas in fossil-fired plants the steam exiting the high-

pressure turbine is returned to the steam generator for reheating in a separate circuit before being sent to the intermediate-pressure and low-pressure turbines; reheating in LWRs is accomplished with live steam in order to minimize the complication of the steam circuit. Another modification adopted is the addition of moisture separators.

Turbine problems have been one of the three leading causes of outages of fossil-fired and nuclear power plants. The main materials causes of these outages have involved mainly thermal fatigue cracking of rotors and discs; condensate-related corrosion or stress corrosion cracking of the last stages of the turbine; and solid particle erosion of the first stage guide vanes.

Attempts to correlate the susceptibility to SCC to alloy microstructural differences (segregation/temper embrittlement) in rotors and discs resulting from the initial metallurgical processing routes, or to the operating history of the turbine have not provided much guidance. SCC occurs only in wet steam at crevices or locations where access to the steam is limited, and depends on the contaminants present in the steam. Steam in fossil-fired units invariably picks up impurities from sources such as condenser/pump leaks; demineralizer/condensate polisher leaks; de-mineralizer breakdown; and from the feed water and the water treatment chemicals used. Such impurities will deposit from the steam whenever their solubility is exceeded due to changes in steam temperature and pressure. The contaminants most implicated in SCC are usually chlorides, sulfates, hydroxides, and phosphates of sodium and iron.

The design criterion for steam turbine blades is high-cycle fatigue: un-notched for the airfoil area, and notched for the blade root area. Locations at which pitting and SCC have been observed in fossil-fired practice have included the attachment of the blades to the discs, so that there is need for careful consideration in the design of the blade-disc mating surfaces to incorporate lessons learned for minimizing susceptibility to SCC. The next-to-last row of blades in the low-pressure turbine is also susceptible to pitting corrosion from deposition of impurities condensed from the steam. Such pitting can eventually result in fatigue of the blades and/or imbalance of the turbine.

The last row of blades in the low-pressure turbine is susceptible to erosion by water droplets shed from the preceding vanes. The severity of water droplet erosion depends on (1) the moisture content of the steam entering the last-but-one stage blades (amount of water); (2) the steam pressure between the next-to-last and last stage (higher steam density will accelerate smaller droplets); and (3) blade tip speed (relative drop velocity from blade to vane).

Since SCWRs are intended to operate essentially continuously near maximum load at temperatures significantly higher than BWRs, it is expected that their potential for solid particle erosion will be similar to that for the present fleet of fossil-fired supercritical steam power plants. The potential for solid particle erosion damage depends on the physical dimensions of the flakes of oxide and the frequency of exfoliation events that, in turn, varies significantly among the alloy types that are used for the upstream piping. Exfoliation is triggered when the stresses in the growing oxide scales exceed some critical value; these stresses result from the thickness of the scale (accommodation between the volume of oxide formed and the volume of alloy consumed), as well as from the mismatch in the coefficients of thermal expansion of the scale and the underlying alloy during cooling from operating temperature. Relationships have been developed for time, oxide-scale thickness, and tendency for scale exfoliation for some of the candidate alloys used in fossil plants, and these can provide guidance on the time at temperature at which exfoliation problems might be expected.

The materials considerations for the SCWR should be based primarily on fossil plant practice, with two caveats:

(i) The maximum alloy temperature required in the SCWR is not higher than the maximum alloy temperature allowed in fossil service

(ii) The threat of SCC from oxidizing or other species resulting from radiolysis of the water is not greater than that from the water conditions prevailing in the supercritical fluid in fossil plants.

The alloys typically used in fossil supercritical steam turbine are listed in Table 22 along with those recommended for SCWR service.

Table 22. Summary of alloy candidates for steam turbines.

Component	Fossil	SCWR	Comments
Casing	cast 0.5%CrMoV	cast 0.5%CrMoV	current
	1.25Cr-0.5Mo		
	2.25Cr-1Mo		
	P122 (HCM12A)		developmental
Valves	cast 0.5CrMoV	cast 0.5CrMoV	current
	Cast P91		developmental (EPRI)
	Cast mod P91+WCoNbB		developmental (VGB)
Bolting	1%Cr-Mo-V	1%Cr-Mo-V	current
	Type 422: 12%Cr	12%Cr	current
	Nimonic 80A		current
Rotor & discs	1%Cr-Mo-V	1%Cr-Mo-V	current, low-alloy, bainitic steels
	forged NiCrMoV A469 Class 8		
	NiCrMoV A470 Class 8		
	NiCrMoV A471 Class 8		
	Type 422: 12%CrMoV		
	mod 12%CrMoV		currently used in Europe
	9%Cr-Co-Mo-W-V-Nb-N-B		developmental
Blades	forged Type 403: 12Cr	Type 403	current
	Type 422: 12Cr	Type 422	

3.2.5.2 Condensers

Condensers used in LWRs and in the SCWR are of similar design to those in fossil-fired units. The exhaust from the low-pressure turbine typically enters the top of the condenser, and passes through the air removal, impingement, and condensing sections. The mode of construction follows conventional heat exchanger practice: the condenser tubes are rolled into the tube sheets and welded in place. These tubes typically are oriented horizontally in the condenser, and are supported along their lengths by various tube-support sheets.

The tubes used to handle the cooling water must resist corrosion by the cooling water itself, which may be of poorly-controlled purity, and may include seawater. Consequently, any in-leakage of the cooling water into the condensate can potentially lead to a rapid upset of the water chemistry. If the impurities introduced from such sources cannot be eliminated by the demineralizer and deaerator, there are likely to be very serious consequences for the whole of the water-wetted circuit.

There do not appear to be any special needs for alloy selection for the condenser in the SCWR design, as long as the water chemistry guidelines developed for the control of corrosion in supercritical fossil plants can be followed. The suggested alloy selection as is shown in Table 23.

Table 23. Summary of alloy candidates for condenser circuit.

Component	Fossil	SCWR	Comments
Condenser tubes	Carbon steel, Duplex stainless steels, Titanium	Carbon steel, Duplex stainless steels, Titanium	Based on fossil experience* where SCC on coolant side is an issue
Condenser body	Carbon steel	Carbon steel	Based on fossil experience*
Demineralizer	Carbon steel	Carbon steel	Based on fossil experience
Deaerator	Carbon steel	Carbon steel	Based on fossil experience
Low pressure feedwater heater	Carbon steel	Carbon steel	Based on fossil experience
High pressure feedwater heater	Carbon steel	Carbon steel	Based on fossil experience
Condensate pumps	F304L	F304L	Must be weldable

*depends on specifics of water chemistry

3.2.5.3 Expected Research, Testing, and Qualification Needs for PCS Materials

The major research activities for PCS materials will be the definition and control of water chemistry and its impact on the qualification of the candidate materials for corrosion and stress corrosion resistance in supercritical water. In the SCWR system, a major concern is the solubility of the materials that will be in contact with the fluid, and the extent that these species and/or exfoliated corrosion products will be transported to the external circuit, where they may be deposited in the turbine or be accumulated in the demineralizer. The main area of unknown is the quantification of the solubility/corrosion in the prevailing water chemistry and at the higher temperature employed in the SCWR, compared to BWR experience. The range of impurities expected in the steam in the SCWR, and the extent to which they can be controlled, are obviously questions that must be addressed in order to provide a rational basis for assessing the potential threat to the turbine of SCC and associated fatigue. This involves materials for discs and rotors, and materials for blading at temperatures up to the maximum steam temperature.

During abnormal operating conditions, the fuel cladding is expected to experience a peak temperature of 840°C for up to 30 sec, at which point the safety systems will reduce the temperature to the range 280-350°C in 1-2 minutes, at least in less than 10 minutes. The SCWR turbine will be protected by immediately by-passing it when an abnormal event occurs; as a result we don't expect the turbine to see these high temperatures; the steam lines might see the high temperatures, but just for 1 or 2 seconds (maybe even less) before the main steam isolation valves close and the containment is isolated. However, it will be necessary to assess the effects of the thermal transient on the performance and degradation of the PCS materials.

Data have been developed for the typical classes of alloys used for the superheater and reheater piping employed in fossil plants upstream of the turbine to quantify the threat of solid particle erosion. The effort required will consist largely of assembling data from all available sources relating to fossil plant experience, the analytical approaches used to analyze those

data, and models or algorithms developed for prediction purposes. It is realized that the available data likely will address the behavior of a few, long-established alloys, probably T-22 and Type 347/321. Nevertheless, it is expected that there will be sufficient similarity with the oxidation behavior of alloys from similar alloy classes, as well as understanding of reasons for any differences, that acceptable interpretation of the existing data will be possible for the range of alloys needed in the SCWR. However, a task has been included for the generation of data as a check on any extrapolations made for alloys different from those for which plant data are available.

3.2.5.4 Experimental PCS Materials R&D Plans

A brief summary of R&D plans and schedules for the SCWR PCS materials is provided below. The tasks are intended to provide the information needed to quantify the influence of supercritical steam on the corrosion, SCC, and IASCC tendencies of the materials candidates for the power conversion. Some of the information that must be generated is common to the reactor core and the external circuit and, since there is a limited capability for simulating the supercritical steam conditions, some of the testing has been amalgamated with the needs for the core components. The additional corrosion tasks listed below address the need for information to evaluate any differences in corrosion product formation, transportation, and deposition in the turbine. The tasks on solid particle erosion are intended to determine the level of assurance available for predicting the tendency for scale exfoliation, and to extend the capability to the materials of interest in the SCWR.

As it is unclear, what chemical species, if any, associated with in-reactor chemistry will appear in the power conversion system, corrosion and SCC testing of materials associated with the power conversion system in supercritical water at simulated in-reactor chemistry, have not been included.

The schedule for these tasks is not well defined because it is highly contingent upon funding availability, which is not known at this time. It is, however, laid out as though the required funding would be available to meet the earliest logical schedule of the tasks identified and it will be subject to revision, based on actual funding availability.

Milestones

FY 2006

- Complete compilation of available information on solubility of candidate materials in supercritical steam,
- Initiate measurements of solubility of candidate materials in supercritical steam
- Complete measurements of solubility of candidate materials in supercritical steam
- Initiate corrosion and SCC testing in supercritical water
- Complete evaluation of factors affecting condensation and stability of corrosive species in steam turbines

FY 2007 and 2008

- Initiate corrosion and SCC testing SCWR power conversion systems materials in supercritical water

- Complete evaluation of factors affecting condensation and stability of corrosive species in SCWR power conversion systems
- Complete collection and evaluation of solid particle erosion in supercritical steam from fossil experience for SCWR applicability
- Initiate testing to predict oxide scale growth, frequency and mode of scale spallation of SCWR power conversion systems materials

FY 2010 and beyond

- Complete testing to predict oxide scale growth, frequency and mode of scale spallation

3.3 Potential Candidate Materials Selections and Research Plans for LFR

Three primary factors will most affect the properties and choice of the structural materials from which the LFR components will be fabricated. These are effects of irradiation, high-temperature exposure, and interactions with molten lead or lead-bismuth coolants to which materials in the primary circuit are exposed. An extensive testing and evaluation program will be required to assess the effects that these factors have on the properties of the potential materials for LFR construction to enable a preliminary selection of the most promising materials to be made and to then qualify those selected for the service conditions required.

Structural materials needs for LFR systems can be divided into five general classes, those for: cladding, reactor vessel, internals, heat exchangers, and balance of plant. For each of these classes, a variety of candidate materials exist, so the associated R&D to assist in a more refined selection will be addressed in the following sections. Additionally, technological advancement is expected to transition the ability of the LFR to operate from the lower temperature (550°C) to the higher temperature (800°C) concepts. Materials capable of higher temperature materials will be needed to support the 800°C systems and these materials are likely to differ from those used at lower temperature.

To push LFR technology to higher operating temperatures, materials capable of higher temperature operation are needed. Higher temperatures lead to greater system efficiency, including coupling to advanced energy conversion systems such as a supercritical carbon dioxide cooled Brayton cycle, and to an enhanced ability to drive thermochemical cycles to produce hydrogen. Advances in structural steels will allow operating temperatures to rise above 550°, but are unlikely to be able to support 800°C options. For the 800°C options, new classes of refractory metals or ceramics will likely need to be developed.

Initial research efforts will concentrate on establishing the technology for lower temperature operation with a smaller effort on advanced materials for higher temperature operation.

The potential candidate materials selected for the LFR to date and an overview of the research deemed necessary to establish the viability of the reactor concept with regard to materials performance are provided in the following sections. Given that this design concept has seen significant changes in overall goals and system attributes, the level of information on materials selection and required research for the LFR system is still in a fairly early developmental state. Updates on the potential candidate materials and required materials research for the LFR will be provided in subsequent revisions of this document.

3.3.1 General Considerations for LFR Materials Research

A discussion of two of the three primary considerations for LFR service, irradiation and high-

temperature exposure are described in the corresponding section on NGNP Materials in this report. While the levels of neutron exposure for the LFR will be much greater for the metallic components, most of the same mechanisms identified at lower fluences will still be of concern, though at a much greater level. Irradiation-induced swelling of structural alloys at the very high fluences anticipated for LFR internal components will be a much greater limitation for selection and operation of metallic materials. The third primary consideration, materials interactions with molten lead or lead-bismuth coolants is described below.

3.3.1.1 Materials Compatibility and Corrosion with Pb and Pb-Coolants in LFRs

Materials compatibility concerns for structural metal alloys that are in contact with the coolants for the LFR will be very significant. General corrosion, thermal-gradient-induced mass transfer, and even stress corrosion cracking and liquid metal embrittlement are all potential failure mechanisms that must be addressed.

Most of the history understanding of structural metal in a Pb or Pb-Bi environment is derived from Russian programs, in which significant development was performed to understand and deploy materials and coolant chemistry control schemes for lead-alloy cooled systems. Outside of Russia, the technological readiness level of lead-alloy nuclear coolant technology is at a much earlier development stage, but the partial knowledge of the Russian experience available to the Western technical community has been factored into this materials plan.

Russian lead-bismuth eutectic (LBE) nuclear coolant technology relies on active control of the oxygen thermodynamic activity in LBE to control corrosion and coolant contamination. Within this framework, a series of structural materials were developed and tested in Russia for enhanced corrosion resistance and acceptable lifetime for operating temperatures below 550°C, with fuel cladding temperature below 650°C. Unfortunately, the most advanced Russian alloys, although similar to some Western alloys, have no direct counterpart.

The oxygen control technique, when properly applied, leads to the formation of “self-healing” protective oxide films on the surfaces of the materials in contact with lead-alloys. This is because the base element (typically Fe) and alloying elements (Cr, Ni) of many structural materials have higher chemical affinity to oxygen than to the coolant alloy constituents. Without such protective measures, Fe, Cr and especially Ni all have non-negligible solubility in lead-alloys that causes severe dissolution attacks.

Oxygen sensors and control systems are thus important components of the reference coolant technology. Alloying materials with elements promoting tenacious and protective oxides (e.g. Si and Al), or treating/coating the surface with appropriate materials for enhanced corrosion resistance, have been developed and tested with oxygen control.

For materials used for operating conditions at the high end of the reference technology (above 500°C), it is necessary in some cases to precondition them, i.e. pre-oxidize them so that the kinetics is favorable for growth of protective oxide film during operations. There has been little systematic evaluation and development in this area.

For promising candidate materials, especially the ferritic and martensitic steels for fuel cladding and other high temperature applications, preconditioning [e.g. hot dipping in oxygen saturated LBE bath] tests and subsequent corrosion testing in lead-alloys needs to be performed.

Using steels as the main structural materials, the existing LBE technology requires a proper control of the oxygen level to mitigate the steel corrosion problem. Under this framework, if

oxygen is depleted, liquid metal corrosion via dissolution attack, and possibly liquid metal embrittlement, can occur. However, at high temperatures in Pb, oxidation kinetics may be accelerated too much and become detrimental. Within this higher temperature range, the mechanical properties of some refractory metals and alloys improve but oxidation problems compound (e.g. internal oxidation of Nb). So oxygen-free coolant technology may be needed for high temperature reactors.

It will also be very important to assess weight loss by corrosion. Temperature gradient mass transfer will likely be an important phenomenon in these systems and experiments should be designed specifically to investigate it. In a system with a temperature difference and with alloy constituents that are soluble in the coolant, it is possible to dissolve from the higher temperature regions and reprecipitate on cooler regions. Because there is a temperature gradient, equilibrium levels could never be established in the coolant, so there is an "engine" that unavoidably transfers mass from one part of the system to another. This would occur in addition to other forms of corrosion. In some liquid metal systems temperature gradient mass transfer has turned out to be the primary issue, even leading to complete blockages in some cases. Test loops with higher temperature and lower temperature sections and appropriate specimens in each region would be needed to assess this issue.

Recent development of lead-alloy spallation target and coolant technology worldwide for accelerator driven systems (ADS) has advanced the state of the art in the West considerably. There is now substantial amount of experimental evidence that the main features of the Russian LBE nuclear coolant technology are valid for forced circulation in small to medium loop type systems. Corrosion tests by various international groups indicate that there are qualified structural materials (US, European and Japanese) for the temperature and flow conditions of the Russian reactors. However, to achieve the high potential aimed for in the advanced reactor system concepts, a significant amount of R&D is needed in the areas of materials and coolant chemistry control.

3.3.2 Cladding Materials Selection and Issues

Cladding material for LFR systems must be compatible with metal or nitride fuel, corrosion resistant in lead or lead-bismuth coolants, and have adequate strength, ductility, toughness, and dimensional stability over the operating temperature range and to doses up to 200 dpa.

Because of the desire to operate to high dose, ferritic-martensitic steels are the primary candidates for cladding in the lower temperature LFR. Because of the extensive work on HT9 for the earlier LMR program, for lower temperature (550°C outlet) LFR systems, HT9 is the initial reference cladding material. However, other steels, as discussed below, offer substantial strength and toughness advantages over HT9, and will probably perform better.

The corrosion resistance of HT9 or any other ferritic-martensitic steel still needs to be proven before it is chosen as the cladding. Both Russian experience and preliminary U.S. corrosion studies indicate that elevated silicon levels may be required to provide adequate corrosion resistance when using oxygen control as the method for cladding corrosion protection. Additionally, earlier U.S. work has indicated that the formation of intermetallic or nitride surface layers based on Zr, Ti, and/or Al may provide satisfactory corrosion resistance. If alloys with higher silicon are required, the irradiation test base must be established for the new higher silicon alloys.

The martensitic steel HT9 was developed by Sandvik, Sandviken, Sweden, for the power-generation industry in the 1960s. It was introduced into the U.S. fast reactor and fusion

materials programs in the 1970s. However, since that time, several improved ferritic/martensitic steels have been developed for the power-generation industry that are significant improvements over HT9. Table 24 outlines the evolution of five generations of elevated-temperature steels over the last 60 years, beginning with 2 1/4 Cr-1Mo steel (T22) in the 1940s.

Table 24. Evolution of ferritic/martensitic steels for power-generation industry.

Generation	Years	Steel Modification	10^5 h Rupture Strength (MPa)	Steels	Max-Use Temperature (°C)
0	1940-60		40	T22, T9	520-538
1	1960-70	Addition of Mo, Nb, V to Simple Cr-Mo steels	60	EM12, HCM9M, HT9, HT91	565
2	1970-85	Optimization of C, Nb,V	100	HCM12, T91, HCM2S	593
3	1985-95	Partial Substitution of W for Mo and Add Cu	140	NF616, E911, HCM12A	620
4	Future	Increase W and Add Co	180	NF12, SAVE12	650

For these newer steels, no lead corrosion data exist, and limited irradiation data exist, although it would not be expected that these steels will behave differently from steels for which more extensive data are available (HT9, EM12, FV448, 1.4914, etc.). Fairly extensive irradiation data were developed in the U.S. fusion materials program on modified 9Cr-1Mo (T91 in Table 24), a second-generation steel. The T91 showed significantly improved irradiation resistance compared to that of HT9, primarily because of the lower carbon concentration in T91. In particular, under irradiation conditions where HT9 develops an increase in the ductile-brittle transition temperature of 120-150ºC, the modified 9Cr-1Mo developed a shift of only 52-54ºC. For the very high neutron exposures anticipated for some LFR components, the reduced radiation sensitivity may be critical.

Other candidate materials that emerged from the fusion program include the reduced-activation 9Cr-2WVTa steel developed in the U.S. fusion materials program. Extensive irradiation testing of this steel showed still more improvement than T91 in irradiation resistance compared to HT9. These results are indications that, although HT9 can and should serve as a reference material for potential ferritic/martensitic steels, given the irradiation experience available, there is every indication that better steels than HT9 are available and should be exploited, if their corrosion resistance is sufficient.

Based on the observations on the 9Cr steels T91 and 9Cr-2WVTa, the third-generation steel NF616 (a 9Cr-0.5Mo-1.8WVNB steel) may offer the same possibility of improved irradiation resistance plus better elevated-temperature strength than either of these two steels. One potential problem with the 9Cr steels is corrosion resistance, which may mean the need for a higher chromium concentration. Therefore, another third generation steel, HCM12A (a 12Cr-0.5Mo-1.0WVNbN steel), should be given consideration. To obtain further significant improvements in high-temperature creep strength from ferritic steels, oxide dispersion-strengthened (ODS) steels will likely have to be produced and evaluated (see Section 3.2.3 on SCWR RPV Internals Materials Selection and Issues for more information on ODS steels).

Qualification of any of these materials requires establishing both corrosion resistance and acceptable mechanical performance and dimensional stability. Corrosion testing of all of the ferritic-martensitic steels is important in increasing the potential operating temperature of LFR

systems. A final possibility is to coat HT9 or another steel in a manner that provides corrosion protection but maintains the acceptable mechanical and dimensional stability performance. Coating and surface modification technology is an important component of the cladding and core internals development program and will need to be evaluated, particularly for the higher desired operating temperatures.

For significantly higher temperature (800°C) applications, steels are not likely to be successful as cladding materials. For the higher temperature applications, ceramics, refractory metals, or coated refractories may be necessary. For these high-temperature candidates, the existing materials database comes from the fusion and space programs. Figure 19 outlines the currently expected operating regimes for many alloys, including the high temperature candidates, but supporting data are limited and not sufficient for qualifying a material for reactor operation. Moreover, the inclusion of materials in Figure 19 is based only on mechanical properties and dimensional stability metrics and does not consider corrosion.

Based on the development work in the fusion programs and early promising results in lead corrosion tests, SiC and SiC composites would be primary candidates for 800°C application although high dose radiation resistance, cost, and fabricability are still major open issues. Tantalum alloys are also expected to be resistant to lead corrosion although they may not be adequate from a neutronics standpoint.

QuickTime™ and a
TIFF (Uncompressed) decompressor
are needed to see this picture.

Fig. 19. Estimated temperature range of candidate alloys based on mechanical properties and dimensional stability considerations only (no corrosion consideration). The stippled regions represent a potential expanded operational region dependent on additional data. [from S.J. Zinkle, and N.M. Ghoniem, Fusion Engineering and Design 51–52 (2000) 55–71]

Potential materials candidates LFR cladding are tabulated in Table 25.

Table 25. Candidate alloys for LFR cladding.

Alloy	550°C Candidate	>550°C Candidate	Corrosion/Stress Corrosion Database	Radiation Database
HT9	Yes	No	Incomplete	Extensive
EP-823	Yes	No	Russian data partially accessible	Russian data partially accessible
SUS 444	Yes	No	Incomplete	Incomplete
Fe-Si alloy	Yes	Incremental	Incomplete	Incomplete
T91	Yes	Incremental	Incomplete	Incomplete
9Cr-2WVTa	Yes	Incremental	Incomplete	Incomplete
HCM12A	Yes	Incremental	Incomplete	Incomplete
HCM12	Yes	Incremental	Incomplete	Incomplete
NF616	Yes	Incremental	Incomplete	Incomplete
E911	Yes	Incremental	Incomplete	Incomplete
N-modified 9Cr	Yes	Incremental	Incomplete	Incomplete
Fe-base ODS	Yes	Incremental	Incomplete	Incomplete
Alloy 800H	No	Yes (low dose)	Incomplete	Incomplete
V-4Cr-4Ti	No	Yes	Incomplete	Incomplete
Ta	No	Yes	Incomplete	Incomplete
W	No	Yes	Incomplete	Incomplete
SiC composite	No	Yes	Incomplete	Incomplete

3.3.3 Core Internals Materials Selection and Issues

Core internals include ducts, grid plates, core barrel, and other piping. In lower temperature LFRs. these can be constructed of either ferritic-martensitic steels for higher dose components or austenitic stainless steels for lower dose components. Advances in structural steels will allow operating temperatures to rise above 550°C, but steels available at present will not support 800°C options. The only alternative steels presently on the horizon for possible 800ºC operation are the ODS steels (see above), but they are still in an early development stage. For the 800°C options, new classes of refractory metals or ceramics are likely to need to be developed. The requirements for internals are very similar to those of cladding with the exception that core internals do not have any interaction with fuel and will operate at lower temperatures and doses than the cladding.

Because transitions between ferritic-martensitic and austenitic materials may occur, properties of welds will also be important for some core internals applications.

For ferritic-martensitic components, the candidates are the same as for cladding. For austenitic components where the neutron exposure is low enough to avoid the inevitable swelling that occurs at high doses, cold-worked 316 stainless steel is the primary candidate, with 304 also a nearer term possibility. 316 and 304 have an established mechanical properties and irradiation performance databases. Corrosion resistance of 316 and 304 in lead alloy coolants still needs to be proven. If the corrosion resistance is inadequate, then a complete corrosion, mechanical properties, and irradiation performance database will need to be developed for alternate candidates. For both ferritic-martensitic and austenitic materials, an option would be to coat a material in such a manner that corrosion protection is afforded without loss of mechanical properties or irradiation stability.

Table 26 summarizes the candidate alloys for LFR core internals as well as the current state of development. With the exception of the austenitic alloys, it is identical to Table 25 on cladding candidates.

Table 26. Candidate alloys for LFR core internals.

Alloy	550°C Candidate	>550°C Candidate	Corrosion/SCC Database	Radiation Database
HT9	Yes	No	Incomplete	Extensive
EP-823	Yes	No	Incomplete	Russian data partially accessible
SUS 444	Yes	No	Incomplete	Incomplete
Aluminized 316	Yes (low dose)	Incremental (low dose)	Incomplete	Incomplete
316	Yes (low dose)	Incremental (low dose)	Incomplete	Extensive
304	Yes (low dose)	Incremental (low dose)	Incomplete	Extensive
T91	Yes	Incremental	Incomplete	Incomplete
9Cr-2WVTa	Yes	Incremental	Incomplete	Incomplete
HCM12A	Yes	Incremental	Incomplete	Incomplete
HCM12	Yes	Incremental	Incomplete	Incomplete
NF616	Yes	Incremental	Incomplete	Incomplete
E911	Yes	Incremental	Incomplete	Incomplete
N-modified 9Cr	Yes	Incremental	Incomplete	Incomplete
Fe-base ODS	No	Incremental	Incomplete	Incomplete
Alloy 800H	No	Yes (low dose)	Incomplete	Incomplete
V-4Cr-4Ti	No	Yes	Incomplete	Incomplete
Ta	No	Yes	Incomplete	Incomplete
W	No	Yes	Incomplete	Incomplete
SiC composite	No	Yes	Incomplete	Incomplete

3.3.4 Reactor Vessel Materials Selection and Issues

The reactor vessel for an LFR must contain the lead coolant at primary inlet temperature. It also must be seismically qualified to hold the volume of lead during operation and shipping. Finally, it must have acceptable mechanical properties over the vessel lifetime (15-20 years). The LFR operates at atmospheric pressure.

For LFR vessels, if the neutron exposure is low enough to avoid swelling, austenitic stainless steels such as 316 or 304 are primary candidates. The EBR-II vessel, which operated in a similar temperature and pressure regime, was built of 304 stainless steel. For pool type designs, the vessel will be in contact with the coolant at the primary inlet temperature and corrosion resistance in low flow or stagnant lead alloy must be verified. HT9 and other ferritic-martensitic steels could also be considered.

The ASME codes have complete cases for only four alloys, 304, 316, 2 1/4 Cr-1 Mo steels, and Alloy 800H. The 304, 316, and Alloy 800H have maximum approved temperatures in the range of 760-816°C. Any other vessel materials or other temperatures will require additional data.

The materials selection, development, and qualification requirements for the vessel are very similar to that for cladding and core internals. Corrosion resistance must be confirmed for 304, 316, and possibly Alloy 800H. If these are inadequate, alternate materials or approaches must be established.

3.3.5 Heat Exchangers Materials Selection and Issues

Heat exchanger materials must have good corrosion resistance in lead alloy coolant, particularly given the thin sections typically employed for such applications. Corrosion test requirements are similar to those for other core components, but without the requirement for radiation resistance. The EBR-II intermediate sodium-to-secondary heat exchangers were a tube and shell type that was constructed from 2 1/4Cr-1Mo steel. For a Rankine cycle, the principle candidate for the primary to secondary side heat exchanger would be 2 1/4Cr-1Mo. Like many alloys, the corrosion resistance in lead alloy coolants of 2 1/4Cr-1Mo is unknown and will need to be demonstrated. Higher Cr alloys like T91 or HT9 are potential backup materials, although the higher Cr content will increase the cost.

For process heat applications associated with high temperature LFRs, an intermediate heat transport loop is probably needed to isolate the reactor from the energy converter for both safety assurance and product purity. Heat exchanger materials screening will be needed very early in the program for potential intermediate loop fluids, including molten salts, He, CO_2 and steam. For interfacing with thermochemical water cracking, the chemical plant fluid is HBr plus steam at 750ºC and low pressure. For interfacing with turbomachinery, the working fluid options are supercritical CO_2 or superheated or supercritical steam.

Corrosion resistance for candidate heat exchanger materials must be established. This may include corrosion resistance to lead alloys, high temperature supercritical carbon dioxide, and aqueous HBr solutions, and molten salt. Decisions on establishing this aspect of the LFR materials program will require better definition of system requirements.

3.3.6 Balance-of-plant Materials Selection and Issues

For lower temperature LFRs, the energy production side is likely to be either a Rankine cycle or a Brayton cycle using supercritical carbon dioxide as the working fluid. No development is needed for the Rankine cycle, as this is commonly used in commercial energy production. For the Brayton cycle, an extensive development program would be necessary, as none of the turbines or recuperators have ever been built. Additionally, there is not a corrosion database for material compatibility in high temperature (~550°C) supercritical carbon dioxide, though this may be a common concern for the GFR. Data exists for high temperature CO_2 vapor and for low temperature (~100°C) supercritical carbon dioxide, but nothing at higher temperatures.

Materials for Rankine cycles exist. Qualified materials for a supercritical Brayton cycles do not exist. If the proposed Ca-Br cycle is selected for hydrogen production, materials qualified for HBr acid use will be chosen.

A key unknown is corrosion resistance in supercritical carbon dioxide for a Brayton cycle. Another is fabricating joints between heat exchangers and bromic acid containing piping.

3.3.7 Expected Research, Testing, and Qualification Needs for LFR Materials

Major Research Areas

Survey and Selection of Candidate Cladding, Duct, and Structural Materials-Mechanical and Corrosion Performance
The objectives of this area include:

- Identification of materials of construction that make the LFR concept feasible
- Early indication of materials behavior or characteristics that limit in-service conditions for LFR components

Candidate materials have been and will be continue to be selected based on literature survey and investigation of materials usage in industrial application. Materials will be screened for adequate mechanical performance, corrosion resistance, and fabricability. Testing will take place over the range of temperatures, flows, and stresses expected in the LFR system. The materials of interest will be different for the lower temperature (550°C) and higher temperature (800°C) versions. For long-life cores, there is a strong need for accelerated materials testing coupled with benchmarked materials performance modeling to reliably predict lifetime performance. For cladding, compatibility with lead/LBE on the coolant side and metal or nitride fuel on the fuel side is required. Weight loss under typical temperature, coolant chemistry, and coolant velocity conditions must be ascertained, as must general corrosion. Weight loss as a function of exposure time in lead alloy is required for all candidates. Stress corrosion cracking and liquid metal embrittlement resistance must be demonstrated.

Lead/LBE Corrosion Testing of Candidate Cladding, Duct, and Structural Materials
The objectives of this area include:

- Acquire corrosion performance and properties data for candidate materials of construction for support of conceptual and preliminary design efforts
- Determine corrosion-based limiting conditions of operation for selected materials

Lead/LBE corrosion properties of candidate materials will be investigated under LFR-relevant coolant conditions of chemistry, flow, and temperature. These tests will be conducted using various techniques and facilities, but most notably by using the DELTA loop at LANL. Therefore, the testing will coordinated in a long-term experimental program that includes development of Lead/LBE technology using the loop facility.

Irradiation Testing of Candidate Cladding, Duct, and Structural Materials
The objectives of this area include:

- Acquire irradiation performance and properties data for candidate materials of construction for support of conceptual and preliminary design efforts
- Determine irradiation properties-based limiting conditions of operation for selected materials

Candidate materials will be irradiated under fast spectrum conditions at LFR relevant temperatures and stresses. Following irradiation, materials will be evaluated to determine mechanical properties, microstructural evolution, and corrosion resistance. These efforts are will be performed as part of a larger materials development and assessment activity within the Generation IV program. As part of the LFR-specific workscope, screening studies may be

performed using high-energy ion beams to induce irradiation-damage microstructures in samples that can be characterized and tested for corrosion properties.

High-Temperature Design Methods
Design methods will be evaluated and extended to cover the temperature and stress regime of the LFR. Developing high temperature design methods is expected to be addressed within Crosscutting Materials R&D.

Materials Modeling
The objectives of this area include:

- Develop mechanistic models of phenomena that control materials behavior in LFR environments
- Use mechanistic materials behavior models to better understand the phenomena that control materials behavior in LFR environments, for the purpose of informing design efforts

Advanced, mechanistically-based models for irradiation performance and corrosion of materials in Lead/LBE will be developed. These developments will need to be coordinated with related activities to be addressed in Crosscutting Materials R&D.

Milestones

FY 2005

- Establish materials testing needs and model requirements for material performance and Pb/LBE compatibility
- Continue LBE flow loop and bench-scale Pb/LBE corrosion testing as appropriate
- Define requirements and plan for further flow testing in Pb at temperatures up to 650°C or higher
- Prepare Materials and Coolant Assessment Report

FY 2006

- Develop detailed integrated LFR materials corrosion testing, evaluation and model development plan
- Establish controllable range of coolant chemistry
- Initiate studies of potential alloy modification, surface treatments and amorphous metals for LFR environments
- Begin corrosion and coolant chemistry testing in high temperature Pb flow system

FY 2007

- Complete initial assessment of mechanical and corrosion properties of primary candidate LFR materials in as-received condition
- Complete preliminary selection of primary candidate materials for LFR system

FY 2008

- Intitiate aging and irradiation assessment of primary candidate LFR materials
- Establish reference cladding design and material specifications

- Establish reference coolant chemistry and flow measurement methods

FY 2009

- Complete initial phase of aging and irradiation resistance assessment of primary candidate LFR materials
- Complete initial phase of material corrosion testing and modeling

FY 2010

- Establish Initial design database for short-term mechanical and corrosion properties of primary candidate LFR materials in as-received condition
- Issue initial LFR Materials Handbook
- Issue initial Pb/LBE Coolant Handbook

FY 2011

- Report mechanistic material modeling for LFR conditions
- Report irradiation performance for LFR conditions

FY 2012

- Report qualification testing and modeling status

FY 2013

- Report status of LFR materials qualification for prototype
- Issue revised LFR Materials Handbook
- Issue revised Coolant Handbook

3.4 Potential Candidate Materials Selections and Research Plans for GFR

3.4.1 Nonmetallic GFR Core and Reactor Internals Materials Selection and Issues

For the purpose of this discussion, it is convenient to categorize the ceramics considered for GFR core applications as described in Table 27. These classifications are helpful when discussing materials requirement in the absence of solid design data needs such as stress levels and types of loading. The motivation for this classification is driven by the lack of robustness of the current GFR designs. It is anticipated that a palette of different high temperature materials, each having unique performance requirements, will be needed.

Table 27. Maturity of ceramics for GFR applications.

Ceramics Class	Performance/Data Requirement	Maturity Level	Lead-Time for Preliminary Selection
Insulating Ceramics	Low/intermediate	Mature	3-5 years
Structural Ceramics	Intermediate	Adolescent	6-10 years
Structural Ceramics	High	Immature	10-15 years

Another metric for discussing these materials classes, and choosing among them for GFR applications, is the required fracture toughness for the material. Most engineering alloys such as steel have extraordinary ability to resist unstable crack propagation under load, with fracture toughness values in excess of 200 Mpa•$m^{1/2}$. Following neutron irradiation, the fracture toughness for steels, as with most engineering alloys can significantly drop, though this is not of great concern unless the fracture toughness drop to values below about 30-50 MPa•$m^{1/2}$. Contrast these numbers with the fracture toughness of monolithic insulating ceramics, which have fracture toughness value on the order of 3 MPa•$m^{1/2}$ and its clear that special considerations in design which is required. However, it is possible through incorporation of platelets, transformable phases (~ 7 MPa•$m^{1/2}$), chopped fibers (~ 10 MPa•$m^{1/2}$), or continuous fibers (~ 25-30 MPa•$m^{1/2}$) to increase the fracture toughness of ceramics. In these cases, the incorporation of continuous fibers are what is being referred to as a "structural composite," with the balance of the second-phase toughened materials falling into the "structural ceramic" category. In summary, when considering the ceramic thermophysical requirements for GFR ceramics, the response of the material and choice of material may be driven by the material toughness, which will drive the timescale and cost of materials R&D.

Insulating ceramics: This class of ceramics has a good knowledge-base for application with low mechanical performance requirements (e.g., tensile stress below ~ 1 MPa) and would require the least time for qualification testing. These nonstructural ceramics might be used as spacers, electrical insulators, and/or thermal insulators in the reactor. Common commercial ceramics such as CaO and MgO are hygroscopic and therefore are not good candidates for applications which may be exposed to water vapor impurities during maintenance operations. Many of the alkali halide ceramics are highly susceptible to radiolysis from ionizing radiation with accompanying high swelling. Since residual gamma radiation would be present during cooling and heating operations, these radiolysis-sensitive ceramics would tend to crack and spall easily during service and/or maintenance operations. Radiolysis-sensitive ceramics therefore should be dismissed from consideration. Candidate monolithic ceramics with moderate radiation resistance include Al_2O_3, $MgAl_2O_3$, Si_3N_4, AlN, SiC, and ZrC. Required testing for GFR applications would focus on filling gaps in the existing database for thermal conductivity degradation and dimensional stability under irradiation of off-the-shelf materials. As will be noted in the irradiation effects section, properties will need to be generated on specific trade-named materials as there can be considerable difference in as-irradiated property changes for nominally the same materials.

The areas of insulating ceramics may cover a wide range of application from local duct insulation to block insulation at the periphery of the active core. Insulating ceramics can be broken down into separate functional classes fibrous and monolithic insulators. For example, there are many ways to achieve insulation in a reactor vessel such as a meter of graphite (K_{th}> 10 W/m-K) thickness plus 0.2 meter of carbon-carbon composite blocks is sufficient to insulate the lower metallic core support structure from the core outlet gas in a HTGR. However, where room is limited to a few inches of insulation thickness to do the same job, a more efficient form of insulation may be needed. Insulation design studies have determined that the best insulation system for high temperature gas-cooled reactor application is the use of Al_2O_3 and SiO_2 mixed ceramic fiber mats (K_{th}<0.1 W/m-K) contained between metallic cover plates attached to the primary structure that requires insulation. Such insulating materials (particularly Kaowool) were used in the past, though performance data is incomplete. Moreover, the operating normal and off normal temperatures (1000 and 1200°C) are aggressive for application of the Kaowool. As example, the pumpable Kaowool temperature limit for continuous operation is 1093°C. Maximum temperature rating is typically 1260°C for

the highest performing Al_2O_3 and SiO_2 mixed ceramic fiber mat insulation. Typically, by reducing the fraction of silica in the wool, or through simultaneous reduction of silica and addition of ZrO_2, insulating mats can achieve continuous and maximum operating temperatures of 1300 and 1400°C respectively. High purity alumina mat can achieve operating temperatures above 1500°C. However, these higher temperature mats would not take advantage of previous data and experience gained with the Kaowool product, therefore a premium would be paid for their use.

Typically, monolithic thermal insulators can have very low (<10 MPa) tensile and (< 50 MPa) compressive strengths, thus their mechanical performance is quite limited. However, in contrast to fibrous thermal insulation, they will be capable of withstanding much greater loading (e.g. gravity) without significant deformation. Following the example of the previous paragraph, it would not be possible to use fibrous matting to replace thermally insulating floor blocks due to the significant compression which would occur. These monolithic ceramics typically have fracture toughness values of 1 to 5 MPa-m$^{1/2}$.

Structural Ceramics: For many applications in gas-cooled reactor cores, the primary stress of concern is compressive in nature. In this case structural ceramics, or toughened monolithic ceramics, would be appropriate. Given that performance requirement for a structural ceramic is more challenging than those of insulating ceramics, and given the limited data on irradiation performance of this class of materials, irradiation performance testing for GFR applications will be longer and more extensive. This is indicated by the 6- to 10-year lead-time in the above table, at the end of which the material would be ready to move into a qualification program. There may be off-the-shelf materials appropriate for these applications. Candidate monolithic structural ceramics include Si_3N_4, AlN, SiC, and ZrC. Additional candidates include whisker-, platelet-, or transformation-toughened ceramics, such as whisker or platelet-toughened Al_2O_3, Si_3N_4, or AlN, and yttria-stabilized ZrO_2. Typical fracture toughness values are 5 to 10 MPa-m$^{1/2}$.

Structural Composites: For application where compressive stresses are extreme (>100 MPa), or where tensile stresses are large (>50 MPa) the use of structural composites consisting of woven ceramic fibers and a ceramic matrix will be required. Currently, only SiC/SiC and C/C composites are of sufficient maturity to be considered for application in the GFR timeframe. An example GFR application would be a control rod sleeve or perhaps the core barrel. One essential difference between this class of materials and the structural ceramics is that structural composites would be uniquely engineered for their application and are therefore not off-the-shelf products. Structural ceramic composites typically have fracture toughness values of 15 to 25 MPa-m$^{1/2}$.

To date, C/C's have found only specialized use as structural materials, and SiC/SiC composites have never been used as a high-stress structural component. The limited application of these materials is due primarily to their relative immaturity, lack of design structural codes governing non-metallic materials, and a conservative approach to structural design. However, one key to improving thermal efficiency of power reactors is increasing operating temperatures above the softening point of both standard alloys and superalloys. At these temperatures (>900°C,) the only materials that can be considered are refractory alloys and ceramic composites.[21]

A primary benefit to the use of composites is the inherent ability to design the properties of the systems and their more predictable failure mechanics. For structural applications, the architecture for both SiC/SiC and C/C will need to be three dimensional to avoid the very low inter-laminar shear stresses inherent in 2-D architecture.[22] However, the actual 3-D architecture can vary widely depending on the applications optimizing for strength, stiffness,

or thermal conductivity in the most critical orientation. For example, control rod sleeves would likely use a spiral-weave as compared to a balanced or orthogonal weave in shroud or core-block application. It is important to note that due to the limited understanding of the mechanical performance, irradiation behavior, and design rules, each material and architectural variant will be treated on a proof basis. In other words, each material will undergo a complete series of irradiation and performance tests to prove itself, rather than relying on limited testing in support of standard modeling.

Up to the maximum off-normal temperature assumed for the GFR (~1500°C) neither SiC or graphite fiber composites exhibit significant degradation in mechanical properties (excluding oxidation effects.) Both materials have similar decreases in thermal conductivity with temperature, though graphite composites have significantly higher absolute thermal conductivity. The main differences between the systems is the relative maturity of manufacture of the C/C system, allowing more design flexibility and lower cost, and the relative insensitivity to irradiation of the SiC/SiC system at temperatures 300-1000°C. Because SiC composite manufacture is less mature than C/C, the determining factor in selecting the system is essentially economic, related to the up-front cost on deploying SiC/SiC balanced with the potential benefit of a longer-lived or lifetime component.

3.4.1.1 Expected Research, Testing, and Qualification Needs for Nonmetallic GFR Core and Reactor Internals Applications

Insulating Ceramics—The primary work in this area will be the determination of the dimensional stability of select commercially available insulating ceramics under GFR appropriate fission neutron irradiation conditions. It is not expected that there will be a spectrum effect on the swelling of these materials except for nitride ceramics, which have enhanced gas production in mixed-spectrum reactors due to a high thermal neutron cross section for gas production by ^{14}N. Therefore, any materials test reactor capable of high-temperature irradiation could be employed for initial scoping studies of non-nitride ceramics.

Structural Ceramics—In association with reactor design specialist, a program to accurately determine the mechanical properties of select structural ceramics with particular emphasis on the statistical nature of failure should be carried out. In addition, an irradiation program will be required to determine the effect of high temperature neutron irradiation on standard thermophysical properties as well as non-standard tests such as creep and fracture toughness will be necessary. Depending on the coolant system selected, an environmental effects program will be required to study corrosion and grain boundary effects leading to mechanical property degradation will be carried out.

Structural Composites—A comprehensive program including processing of structural composites of appropriate architecture and composition for GFR application will be required. In parallel, a high-dose irradiation campaign must be carried out to determine not only the mechanical property changes under irradiation but also the swelling and thermal conductivity of structural composites under irradiation. In parallel, a committed ASTM standards development actively will be required to appropriately set standards for testing.

Carbon-Carbon Composites—Carbon-carbon composites will be heavily evaluated for use as structural materials for the NGNP. The primary difference between the C/C composites applications in the GFR and the NGNP is that the GFR C/C components will be limited to usage well outside to core to minimize excessive moderation, but even so, they will see significantly higher fluences. Hence, the only additional scoping research required for the GFR must

address limits of neutron exposure applicable to C/Cs at the temperature of operation and limited studies to ensure the radiation in a fast spectrum is not significantly different that existing data base developed primarily in a thermal reactor spectrum.

Regulatory and Codification Requirements—An ASME code for composites used under GFR core conditions has not been developed. However, it is not clear that any codes will be required. General requirements for regulatory and codification requirements that may be needed for the GFR will be developed under the NGNP program. These may need to be extended to the more extreme conditions of the GFR, but not during the scoping phase of research.

Manufacturing Infrastructure Required—A mature manufacturing infrastructure for the advanced radiation-resistant SiC/SiC composites that will likely be used for the GFR does not exist at this time. Exploration of the path to developing this infrastructure will need to be examined during the scoping phase of GFR materials research.

3.4.1.2 Experimental Ceramics Core and Internals R&D Plans

The schedule and costs for this area of R&D contained in Table 28 makes a number of approximations as to the level of effort necessary to carry out the GFR ceramics scoping work. The primary assumption is that in the first phase of GFR, which will be carried out over through 2010, the goal is to prove the viability of a few materials in each class. Once this Phase 1 proof of principal is carried out, a set of candidate ceramics materials can be recommended for Phase 2 with a high degree of confidence.

Specifically, assessments of the materials compatibility of insulating and structural ceramics as well as ceramic and carbon composites will be made with helium and S-CO_2 environments. Mechanical and thermophysical properties screening studies as a function of irradiation will be performed, including standards formulations for testing of the structural composites. This work will begin in FY05 with the evaluation of irradiation on core ceramic materials using ion irradiations and by preparing specimens of numerous candidate materials for inclusion in the Futurix-MI high-dose, fast-spectrum neutron irradiations to be performed in the Phoenix reactor.

3.4.2 Metallic GFR Core and Reactor Internals Materials Selection and Issues

Because the core operates at such high temperatures in normal conditions, and greatly exceeds even those temperatures during thermal excursions in accidents, ceramics are the prime candidates for core internals. However, based on their high temperature capabilities, refractory alloys could also be considered as alternates, but only if the oxygen content in the system can be maintained well below ~1ppm. In general, currently available refractory alloys are extremely susceptible to oxidation even at that level [23,24]; it is understood that the technology is not currently available to maintain oxygen to such low levels in such a system as the GFR. Cermets or intermetallic structures have also been suggested. It may be possible to eventually develop very high temperature versions of more conventional alloys based on Fe-Cr-Ni systems with greatly improved microstructural stability under severe temperature excursions. For example, oxide-dispersion strengthened (ODS) ferritic-martensitic alloys have shown very good creep resistance at temperatures above 800°C, and good structural stability up to 1300°C [25,26].

The normal operating temperatures for the three primary out-of core internals components range from 490°C to 850°C for the reference design. For the lower support plate, the low-swelling austenitic stainless steels and advanced versions of the 8-9Cr ferritic/martensitic steels

are viable classes of candidate materials, depending upon design loading conditions. However the higher maximum temperatures for the upper support plate and core barrel (850°C) are beyond the operating capabilities of these materials, and for these applications it will be

Table 28. Schedule and summary costs for GFR core and internals ceramics research.

Task	FY05	FY06	FY07	FY08	FY09	FY10	TOTAL
źInsulating Ceramics							
Dimensional Stability Under Irradiation			400	500	500	500	1,900
Environmental Effects		100	200	200	200	100	800
Structural Ceramics							
Mechanical & Physical Properties Tests		900	1000	1400	1500	1800	6,600
Thermal/Dimensional Properties Under Irradiation	100	450	500	600	600	600	2,850
Environmental Effects		400	500	500	500	300	2,200
Ceramic Composites							
High Dose Thermomechanical and Dimensional Properties	150	2,200	2,300	2,000	2,000	1,800	10,450
Processing and Properties		1,100	1,100	800	800	600	4,400
Environmental Effects		100	200	200	200	100	800
ASTM Standards Development		50	50	50	50	50	250
Carbon Composites							
Baseline Materials Testing and Characterization		300	450				750
Full Scale Testing and Verification				400	400		800
Irradiated Materials Evaluations	75		225	500	500	500	1,800
Environmental Effects		100	200	200	200	100	800
ASTM Standards Development		50	50	50	50	50	250
TOTAL	325	5,750	7,175	7,400	7,500	6,500	34,650

necessary to turn to the Ni-base alloys for the required high temperature strength and dimensional stability or to ODS versions of the ferritic and ferritic/martensitic steels produced by mechanical alloying. For alternate designs 1 and 2, where the outlet temperatures are 300K and 200-250K, respectively, below the outlet for the reference design, the normal operating temperatures for all three out-of-core components range from 300°C to 650°C. In all three

cases, the advanced austenitic stainless steels, designed for swelling resistance, and the advanced version of the 8-9Cr ferritic/martensitic steels provide a group of viable candidate materials.

The preliminary estimates for off-normal transient conditions are of concern and the possible frequency and duration of various off-normal scenarios will require further evaluation since these parameters could strongly affect material selection. For the ferritic/martensitic steels, significant excursions above ~900°C could lead to serious embrittlement through an austenite to martensite transformation. Similar temperature excursions for the austenitic steels could lead to the destruction of the steady-state swelling-resistant microstructure and subsequent rapid swelling. The Ni-based superalloys are potentially better able to withstand high temperature excursions and therefore should also be considered for each of these applications. However even these alloys may undergo incipient melting at temperatures as low as ~1200°C, and there are significant concerns about radiation-induced grain boundary embrittlement of Ni-base superalloys at temperatures above 500°C for damage levels above a few dpa. More detailed information on the austenitic stainless steels and ferritic/martensitic steels for reactor applications may be found in a recent report on the survey of materials requirements for the SCWR [27]. The application of Ni base alloys for out-of-core components has recently been discussed in detail in the materials selection and qualification report for the NGNP [1].

3.4.2.1 Expected Research, Testing, and Qualification Needs for Metallic GFR Core and Reactor Internals Applications

Although the initial approach to the reference design for in-core structures will be based upon the application of ceramic materials, a review of the current status of selected refractory metal alloys will be carried out with emphasis on mechanical and oxidation behavior and radiation effects. It will then be possible to evaluate possible R&D approaches to developing refractory metal alloys for applications in the reference GFR environment.

Metallic materials for the reactor internals will be reviewed comprehensively. This review will build heavily on a similar review for the NGNP. The existing database for those alloys will be assembled, analyzed, and evaluated with respect to the design and operating requirements presented above. Of particular importance is the review of the irradiation performance data for each of the three main alloy classes. Based upon this review, a limited set of candidate advanced austenitic steels and ferritic/martensitic steels will be defined. Additional property measurement and testing will be carried out on these materials to cover specific aspects of the GFR environment for which the existing database may be inadequate. Examples of this are: determination of (1) the effects of long-term exposure to supercritical CO_2 on mechanical behavior, (2) long-term structural stability at GFR temperatures, and (3) the impact of off-normal temperature excursions on structure and properties. Irradiation experiments will be designed and carried out to complement and expand the existing database to cover the projected GFR conditions.

The Ni-base alloys present a different situation since every known set of irradiation data has indicated the potential for high-temperature grain boundary embrittlement. Additional mechanical property assessment for Ni-base alloys, beyond what is already planned for the NGNP, is unwarranted until feasible approaches to solving the grain-boundary embrittlement problem have been demonstrated. Following an in-depth review of the available data and the possible mechanisms involved, low-dose irradiation experiments will be conducted on a series of modified and exploratory alloys to investigate compositional/microstructural strategies to mitigate high temperature embrittlement.

The development of nano-structured alloys fabricated by mechanical alloying presents a promising approach to expanding the high-temperature capability in terms of both creep and swelling resistance and oxidation behavior. It is proposed to evaluate existing ODS materials and, if warranted, initiate R&D on the design and fabrication of exploratory new materials, both Fe and Ni-based, specifically designed to meet the more challenging aspects of the GFR environment primarily through a collaborative program with on-going research efforts in this area.

Materials deemed appropriate for use at temperatures and radiation doses of the GFR will be exposed in supercritical CO_2 in the temperature range 350 to 1250°C for time of up to 10,000 h. These tests will establish reaction kinetics, corrosion allowance, and effect on mechanical properties. It is anticipated that even in the absence of graphite in the core, a helium environment can be established that is within the range of previous test environments. If this cannot be achieved, testing in the proposed helium similar to that stated for supercritical CO_2 will be required. In addition, the stability of the proposed helium environment will need to be established.

3.4.2.2 Experimental Metallic Core and Internals R&D Plans

A comprehensive assessment of the current status of advanced austenitic stainless steels and ferritic/martensitic steels will be carried out focusing on materials with proven potential for swelling resistance and satisfactory high temperature mechanical behavior. A limited set of selected materials will form the basis of a program to evaluate mechanical behavior, long-term microstructural stability and radiation resistance, focusing on pertinent GFR conditions. Following an evaluation of the radiation effects data base on Ni alloys, low dose neutron irradiation experiments will be carried out to assess various strategies for reducing the susceptibility to grain boundary embrittlement. The potential application of refractory metal alloys will be assessed and work carried out to investigate the potential for current and improved nano-structured Fe- and Ni-base alloys with properties specifically tailored to GFR conditions. Current required estimates of schedule and required funding in this area are given in Table 29.

Table 29. Schedule for GFR metallic internals research.

Task	FY05	FY06	FY07	FY08	FY09	FY10	TOTAL
Refractory metal alloys assessment		300	200				500
Assess advanced austenitic and F-M steels and Ni alloys; select candidate alloys		700	800				1,500
Determine baseline mechanical properties and long term microstructural stability		700	700	200			1,600
Assess environmental effects on mechanical properties of candidate alloys			400	600	800	600	2,400
Assess irradiation effects on candidate advanced austenitic and F/M steels		1200	3000	4200	3600	3000	15,000
Assess irradiation effects on candidate radiation-resistant nickel-based materials		400	1000	1400	1200	1000	5,000
Assesement and development of Fe, Ni and RM base nano-structured materials		500	500	400	300	300	2,000
TOTAL	0	3,800	6,600	6,800	5,900	4,900	28,000

3.4.3 RPV Materials Selection and Issues

Based on the currently estimated operating temperatures, 2 1/4Cr-1Mo steel would be the most likely candidate pressure vessel material for the GFR, if design and construction were to begin today and if the RPV was somehow shielded to reduce irradiation exposure significantly. However, given the lead time available before material selection is anticipated for the GFR system, materials research and development efforts with other ferritic materials should be a definitive part of the GFR program. Even for the NGNP, for which the lead time is very short, it is anticipated that further developments with variations in the modified 9Cr-1Mo class of ferritic-martensitic steels will provide a material with superior high-temperature creep strength than currently available and with far superior radiation resistance than 2 1/4Cr-1Mo steel. In the case of the GFR system, the research and development program should incorporate more advanced materials in the overall class of ferritic-martensitic steels, some of which are currently in progress. For example, advances in dispersion strengthened alloys and ongoing research with nitrogen modified steels are indicating significant promise for extension of adequate creep strength to temperatures of about 800ºC. Alternate pressure vessel materials such as Fe-3Cr-3WV steel should also be considered and some of these materials are discussed in more detail in a later section.

3.4.3.1 Expected Research, Testing, and Qualification Needs for GFR RPV

A comprehensive and detailed review of the potential candidate materials for the RPV system will be performed. This review will build heavily on a similar review for the NGNP but will examine the materials with respect to the different operating temperatures and much higher radiation doses associated with the GFR RPV. The existing database for those alloys will be assembled, analyzed, and evaluated with respect to the design and operating requirements presented above that are different that the NGNP. Use of other advanced materials will be evaluated.

A baseline materials test program will be conducted that augments the evaluation of all the basic mechanical and physical properties, and microstructural characterization anticipated for the NGNP program. The properties needed for all the various materials are essentially the same for all three GFR design concepts, with the exception of the S-CO_2 direct design which requires additional considerations. As mentioned earlier, this design is of much higher pressure and will require a significantly thicker vessel with the concomitant issues of fabricability, both with respect to through-thickness properties and welding. Moreover, this design presents a more aggressive environmental situation with regard to corrosion/oxidation of materials and additional creep testing in the anticipated environment will be required. Thus, especially in this case, the environmental issues will require substantial evaluation.

Because of the 60 y design life, thermal aging is a significant issue for the GFR, as it is with the NGNP. Thus, as with the NGNP research plan, thermal aging experiments will be required to obtain data not currently available. Although there is some temperature overlap with the NGNP, it is not comprehensive and additional experiments will be required specifically for the GFR.

The anticipated radiation exposure for the GFR RPV is significantly higher than that for the NGNP. Most of the ferritic-martensitic steels discussed earlier have good radiation resistance to embrittlement and swelling in the anticipated temperature regime and to the anticipated radiation dose. However, specific radiation experiments will be required at the specific design conditions to validate that information for the designers and for the regulatory authority. As a first step, a detailed review will be conducted of irradiation effects on all the potential candidate alloys mentioned above. An experimental program will be designed based on the results of the review and irradiations of preliminary candidate materials will begin once an irradiation facility is identified. In addition to irradiation of the currently identified materials, selected advanced materials will be included. For purposes of this plan, specimens to be irradiated will include those for tensile, creep, and stress rupture, Charpy impact, and fracture toughness. In the case of an RPV without heavy shielding against radiation, irradiations would be conducted in a high-flux facility to attain the necessary dose (~15 dpa) in a reasonable time. For the use of standard 2 1/4 Cr-1 Mo steel, some shielding (e.g., tungsten) would be required to decrease the dose to below about 0.1 dpa, and a low flux irradiation facility would be more appropriate to obtain the necessary data.

3.4.3.2 Experimental Reactor Pressure Vessel Materials R&D Plans

Although many of the research needs for the GFR RPV will be undertaken within the research scope of the NGNP, there are some differences between the operating conditions that will require GFR-specific research. Moreover, there are significant uncertainties regarding those conditions for the three different GFR designs, primarily related to the greater radiation exposure of the vessel materials. Most of the ferritic-martensitic steels being considered have good radiation resistance in the anticipated temperature regime and to the anticipated radiation dose. However, specific radiation experiments will be required at the specific design conditions to ensure that the potential candidate materials will perform adequately under GFR conditions. Current required estimates of schedule and required funding in this area are given in Table 30.

3.4.4 High Temperature Metallic Components Materials Selection and Issues

Based on the operating conditions of GFR and ongoing efforts made in NGNP materials selection, two groups of metallic materials are recommended as primary and secondary candidates, respectively, for high temperature metallic GFR components.

The primary potential candidate materials for high-temperature balance of plant components other than the power conversion system are listed in Table 31 with brief status information. Among these materials, Inconel 617 is considered as a leading candidate. The material was developed in the earlier gas-cooled reactor projects, and could be applied. Alloy 800H is in Subsection NH, and would be the leading candidate for the intermediate temperature range of 600-760ºC. The 316FR stainless steel is not has the significant advantage in the United States

Table 30. Schedule for GFR RPV research.

Task	FY05	FY06	FY07	FY08	FY09	FY10	TOTAL
Baseline Materials		600	600	400			1,600
Aging		200	100	100	100	100	600
Irradiation Effects		600	600	400	400	400	2,400
TOTAL	0	1,400	1,300	900	500	500	4,600

of having gone through ASME Code deliberations that culminated in the draft Code case, and the body of experts that developed the case simultaneously identified what must be done before the Code case in Subsection NH, but the database is adequate to incorporate the steel should the need arise. The Gr91 and Gr22 (Class 1) steels are currently in Subsection NH.

Table 31. Primary potential candidate materials for high-temperature metallic GFR components.

Primary Candidates	Nominal Composition	UNS Number	Existing Data Max Temp. °C	Helium Experience	Aging Experience	Section II Physical Props	Design Codes
Inconel 617	45Ni-22Cr-12Co-9Mo	N06617	1100	Yes	Yes	No	Yes
Incoloy 800H	33Ni-42Fe-21Cr		1100	Yes	Yes	Yes	Yes
316FR	16Cr-12Ni-2Mo		700	No	Yes	No	No
Gr91	9Cr-1Mo-V		650	No	Yes	Yes	Yes
Gr22	2 1/4Cr-1Mo		650	Yes	Yes	Yes	Yes

The secondary potential candidate materials for GFR are listed in Table 32. These materials are considered as secondary candidates mainly because their databases have not been developed for inclusion into the high-temperature nuclear code (ASME BVP Sect. III, Subsect. NH). All of these materials, with the exception of CCA617, have extensive databases.

Table 32. Secondary potential candidate materials for high-temperature metallic GFR components.

Secondary Candidates	Nominal Composition	UNS Number	Existing Data Max Temp. °C	Helium Experience	Aging Experience	Section II Physical Props	Design Codes

Hastelloy X	Ni-22Cr-9Mo-18Fe	N06002	1000	Yes	Yes	Yes	No
Hastelloy XR	Ni-22Cr-9Mo-18Fe		1000	Yes	Yes	No	Yes
CCA Inconel 617	45Ni-22Cr-12Co-9Mo	N06617	1100	No	No	No	No
Alloy 230	53Ni-22Cr-14W-Co-Fe-Mo		900	No	No	Yes	Yes
Gr92	9Cr-1.5W-Mo-V-Nb		650	No	No	Yes	Yes
Gr23	2 1/4Cr-1.5W-V-Nb		650	No	No	Yes	Yes

There are a number of outstanding potential candidates that have not been included in Tables 31 and 32. Their inclusion depends to a large extent on which option is under consideration. Clearly, for any option, the Co-bearing alloys are to be avoided where radiation fields may be present. Thus, alloys 617 and CCA617 may not be first choices for components located in the immediate vicinity of the reactor vessel. Alloy 230 is a good alternative to alloys 617. Hastelloy XR is low in Co, which provides an advantage over Hastelloy X. These alloys may be adequate for the helium option.

For high-temperature heat exchanger and piping for helium service materials, new alloys, such as SAVE 25, 602CA, HR120, and Sanicro29, could be considered. Generally, these alloys are far from being qualified for Sect III construction, but have good promise.

Although the service temperatures are lower, the CO_2 service environment presents a major consideration in the selection of alloys. To avoid carburization or metal dusting, it is preferable to have alloys that are high in nickel and chromium. Nickel cladding of the structural materials could be an option. Also, alloys that are alumina-formers could be considered, if they could be heat-treated to form the needed protective coating prior to service. Lacking these options, the austenitic and ferritic steels listed in Tables 31 and 32 remain the primary and secondary candidates for all three options.

3.4.4.1 Expected Research, Testing, and Qualification Needs for High Temperature Metallic Components

The research and development plan for the high-temperature GFR materials assumes that the efforts on the NGNP will be directly applicable. At this point, it is recognized that the materials listed in Tables 31 and 32 are also in the NGNP plan. The emphasis should be placed on the elements that are different in the two systems. Specifically, it will be the environment that will differ between the GFR and the NGNP. The GFR plan should include both helium and CO_2 effects on the mechanical properties. Here, it is assumed that corrosive characteristics of the helium and CO_2 environments will be established as another part of the GFR material research plan. The specific temperatures and times for the different materials should be linked to the components for which the materials are candidates. For example, testing of the nickel base alloys in helium should be extended to 850ºC. The proposed testing temperatures for candidate GFR materials are listed in Table 33.

Having established materials and conditions, the first logical step is to assess the experience with the alloys or similar alloys. This information then forms a foundation on which to develop an exploratory testing program to gather the data needed to determine feasibility of the GFR concept. Typically, the kind of exploratory mechanical testing includes creep-rupture, fatigue, crack growth, and combinations of the three. The experimental activities for the scoping phase

should not be extensive, but rather sufficient to identify significant trends and assess any unexpected viability issues.

Table 33. Testing temperatures and environments for GFR potential candidate high-temperature alloys.

Alloy group	Helium Environment	CO_2 Environment
Nickel base	850	600
High alloy	760	600
Stainless steel		600
Martensitic steel	600	550
Low alloy steel		500

3.4.4.2 Experimental High-Temperature Metallic Materials R&D Plans

Since the operating temperature conditions for the GFR metallic high-temperature structural materials are expected to be within the limits of existing ASME construction codes, the needs for viability research will largely focus on environmental testing to assist in the estimation of corrosion allowances and the assessment of the impact of corrosion on component performance. To these ends, static and dynamic testing in representative environments will be required. It is expected that the research effort on helium contamination effects in the NGNP program will be adequate to assess the viability of the GFR concepts. The CO_2 effects are unique to the He-S/CO_2 indirect and all-S-/CO_2 options, however, so some exploratory creep-rupture, creep crack growth, fatigue, and creep-fatigue testing in CO_2 will be needed. An estimate of the schedule and required funding for the exploratory testing of metallic candidate materials is provided in Table 34 below.

Table 34. Schedule for GFR high-temperature metallic components research.

Task	FY05	FY06	FY07	FY08	FY09	FY10	TOTAL
Assess CO_2 effects on creep-rupture and creep crack growth		220	300	200	200	100	1,020
Assess CO_2 effects on fatigue and fatigue crack growth		240	400	400	350	250	1,640
TOTAL		460	700	600	550	350	2,660

3.4.5 Power Conversion Components Materials Selection and Issues

The candidate materials for the various components of the 850°C GFR reference design power conversion system should be essentially identical to those proposed for the higher temperature NGNP. For example, the turbine inlet shroud, which sees the full normal operating temperature in the system, can certainly use the wrought Ni-base alloys (Alloy 617 and Hastelloy X) proposed for the NGNP. In fact, given the lower temperature in the GFR, Fe/Ni-base Alloy 800H might also well be acceptable for this application.

The other highest temperatures in the GFR reference design power conversion system will be experienced in the first-stage turbine blades and disks. Typically, the disks of the first three stages are cooled to <650°C; the blades are not cooled and maximum metal temperature is in

the range 800-850°C. Wrought Nimonic alloys (Ni with about 20 wt.% Cr with additions of Ti and Al and sometimes Mo) are prime candidate alloys for the disks. An example is Nimonic 80A which was developed for service up to 750°C. A large number of similar alloys with comparable properties are also commercially available. The blade material will almost certainly be a cast Ni-base alloy such as Alloy 713LC or IN-100. It should be noted here, however, that the exact materials selected for the disks and blades will likely be highly dependent on the turbine manufacturer selected as each manufacturer has its own favorite materials based on experience and turbine conditions. Further, the materials R&D plan for the NGNP delegated material choice and qualification of the materials chosen to the turbine manufacturer eventually selected.

The recuperator for the 850°C GT-MHR is currently a modular counter-flow He-to-He heat exchanger with corrugated-plate heat exchange surfaces; that for the 850°C GFR reference design will likely be similar. Both would operate with helium inlet from the turbine at ~500°C. Austenitic 300 series stainless steels are the prime candidates for all portions of the recuperator. Examples are 316L and stabilized steels such as 321 and 347.

The blades and disks in the GT-MHR power conversion system high- and low-pressure compressors operate at about 110°C and a Ti alloy with 6%Al and 4%V is the primary candidate alloy. This should also be acceptable for the GFR reference design system. Finally, the precoolers and intercoolers (He-to-water heat exchangers) of both the GT-MHR and GFR reference would operate with maximum He temperatures of 150°C and water temperatures of 60°C. A titanium-stabilized 300 series stainless steel, 321, is the primary candidate alloy for the GT-MHR design.

The materials for the power conversion system components in the two alternate designs should be identical as the projected operating conditions for both are essentially identical. It would be expected that use of the candidate materials for the reference design would be conservative because of the much lower inlet temperatures in the turbine (550°C) and the recuperator (400°C).

3.4.5.1 Expected Research, Testing, and Qualification Needs for Power Conversion Components

Only the issue of compatibility of materials with supercritical CO_2 is critical to establishing the viability of existing materials for candidate GFR power conversion systems. To this end, potential materials for the alternate concept power conversion system turbine and recuperator should be exposed in supercritical CO_2 at appropriate temperatures ranging from 350-650°C for times to ~10,000 h. These tests should be performed to establish reaction kinetics, set corrosion allowances, and to determine effects of reactions with supercritical CO_2 on mechanical and physical properties. The results obtained will be important in the materials down-select process.

To this end, three turbine inlet shroud materials, two turbine blade materials, two turbine disk materials, and two recuperator materials should be selected from the preliminary candidate materials discussed earlier and exposed to supercritical CO_2 as indicated in Table 35. The materials tested for the turbine inlet shroud will likely overlap those for the indirect cycle IHX and for the direct cycle high-temperature metallic components. Recuperator materials may also overlap with those for latter alternate cycle.

Table 35. Power conversion system materials compatibility test matrix

for alternate GFR designs.

Test Temp. °C	Power Conversion System Component				
	Turbine Shroud	Inlet	Turbine Blades	Turbine Disks	Recuperator
350					X
400					X
450				X	X
500	X		X	X	X
550	X		X	X	
600	X		X	X	
650	X		X		

3.4.5.2 Experimental Conversion System Materials R&D Plans

Potential materials for the alternate concept power conversion systems' turbines and recuperators should be exposed in supercritical CO_2 at appropriate temperatures ranging from 350-650°C for times to ~10,000 h. These tests should be performed to establish reaction kinetics, set corrosion allowances, and to determine effects of reactions with supercritical CO_2 on mechanical and physical properties. The results obtained will be important in the materials down-select process. An estimate of the schedule and required funding for the exploratory testing of power conversion materials is provided in Table 36 below.

Table 36. Schedule for GFR power conversion materials research.

Task	FY05	FY06	FY07	FY08	FY09	FY10	TOTAL
Baseline Materials Assessment		250	300	250	250		1,050
Environmental Exposure in CO_2		200	200	150	150		700
Post Exposure Materials Assessment		100	350	350	350	300	1,450
TOTAL	0	550	850	750	750	300	3,200

3.4.6 Materials Compatibility Considerations to Establish Feasibility of GFR

Helium—It is expected that the materials performance needs for the GFR in helium will be largely covered by the work needed for the NGNP and data generated in previous helium-cooled reactor work. The major exception is the demonstration of feasibility of gas cleanup for the reactor with little or no graphite internals. Tests are needed to demonstrate that under the appropriate helium flow rate and atmospheric ingress, the composition of the helium can be maintained within the compositional range of previous testing range. These tests will require an appropriately sized, pumped loop with associated chemistry measurement and side stream gas cleanup equipment.

Supercritical CO_2—Because of the dearth of materials performance data in supercritical CO_2 at the pressures and temperatures of interest, an exploratory database must be developed to establish feasibility of the concept. The materials proposed for various components of the supercritical CO_2 cooled reactor will be evaluated over the expected temperature range. As a minimum, the corrosion performance and mechanical properties of proposed materials in

supercritical CO_2, and the lift-off and plating characteristics of the corrosion products must be determined.

Test Program—The tests proposed in this section are in addition to environmental mechanical properties and thermal-physical properties testing proposed in other sections of this feasibility study.

The helium side-stream cleanup studies are needed to establish feasibility of this approach to maintaining control of the helium environment and to determine whether the existing data can support validity of the GFR helium concept or the need for a more extensive test program. It is envisioned that a small number of the materials chosen for their ability to withstand the higher radiation exposure of the GFR, as compared to the previous HTGRs, will need to be evaluated for corrosion performance. These tests will be performed at temperatures up to 50°C that the expected exposure temperatures.

A much more extensive array of specimens will need be evaluated for the supercritical CO_2 environment. It is envisioned that these tests will be performed in a supercritical CO_2 loop for varying times up to 10,000 hours. These tests will provide for a down-select of materials capable of surviving in the supercritical CO_2. This smaller subset of materials will then be evaluated in a in-reactor supercritical CO_2 loop. This will allow for exposure of the chosen materials to the radiolytic products of the supercritical CO_2 coolant. In addition, the chemistry of the supercritical CO_2 will be ascertained so as to allow for an understanding of the effects of radiolysis on the coolant and to correlate materials performance with environmental exposure.

Because choices of materials are still be modified, the proposed test matrix contained in Table 37 will be identified by materials application rather than specific materials.

Table 37. Environmental materials test matrix.

Materials application	Environment
High dose tolerant metals	Helium
Ceramic internal	Supercritical CO_2
Inert fuel matrix ceramics	Supercritical CO_2
Metallic internal	Supercritical CO_2
Pressure vessel cladding	Supercritical CO_2
Lift-off/plating experiments	Supercritical CO_2
Ceramic internal	In-reactor supercritical CO_2
Metallic internal	In-reactor supercritical CO_2
Pressure vessel cladding	In-reactor supercritical CO_2

3.4.6.1 Experimental Materials Compatibility R&D Plans

Tests are needed to establish the viability of materials performance in the proposed GFR environments, both helium without graphite and supercritical CO_2. Test will be performed to determine the possibility of helium gas cleanup. If cleanup is possible, the helium environment, most likely, will be similar to the previous test environments and hence, data from the previous test programs can be used to support viability determinations. In addition, compatibility tests are needed to ascertain the performance of materials that were not previous evaluated. Because of the lack of information, a larger suite of tests are needed for the supercritical CO_2 environment. Besides materials compatibility information, lift-off/plating studies of corrosion products are required. The latter studies require the use of loop that can attain the appropriate velocities of supercritical CO_2 at test temperatures. The tests proposed in this section are in

addition to mechanical or physical properties testing in the specific gaseous environments already included in other sections of this feasibility study. Additionally, tests of both the chemistry produced in the S-CO_2 by in-core radiolysis and assessment of its effects on candidate materials will be required. An estimate of the schedule and required funding for the exploratory testing of materials compatibility issues is provided in Table 38 below.

Table 38. Schedule for GFR materials compatibility research.

Task	FY05	FY06	FY07	FY08	FY09	FY10	TOTAL
Ź Helium							
Helium loop (recirculating, low velocity)		200	300				500
Helium side stream cleanup studies			300	400			700
Helium corrosion studies				200	400	300	900
Supercritical CO_2							
Supercritical CO_2 corrosion test loop (low velocity)		300	200				500
Corrosion performance of proposed materials			200	400	400	200	1,200
Supercritical CO_2 lift-off test loop (high velocity)		200	600	900	300		2,000
Lift-off and plating performance of materials				300	500	600	1,400
Supercritical CO_2 in-reactor loop (low velocity)		500	500	500			1,500
Supercritical CO_2 in-reactor loop corrosion studies			500	1500	1800	1200	5,000
Supercritical CO_2 in-reactor loop chemistry studies			800	2000	1600	600	5,000
TOTAL	0	1,200	3,400	6,200	5,000	2,900	18,700

3.4.7 Required HTDM Experimental and Analytical Activities for GFR

Assuming that the bulk of HTDM needs for GFR will be covered by activities already planned for the NGNP, the following tasks will remain to establish viability.

- Evaluate methods, existing data, and assist in planned test activities of pressure vessel materials and metallic core internals and reactor internals specific to GFR to gain material (creep, fatigue, creep-fatigue) properties required for HTDM.
- Evaluate the results of testing for GFR, propose a method to address variation in material properties of pressure vessel material with thickness for high temperature design (section NH).

- Evaluate the need and assess the available damage models and life prediction approaches (creep, creep-fatigue) to address 60 year design service life (aging effects) with available data, and extrapolation of data for such long periods, for both base and weld metals (pressure vessel, core and reactor internal materials). Develop or propose appropriate models for high temperature design.
- Analyze and simulate component-like parts under representative loadings, irradiation exposure and times for high temperature service. Determine if issues arise regarding ratcheting, multiaxial effects, creep, and creep-fatigue; develop high temperature design methods and rules to avoid deleterious issues.
- Participate in required ASME Code meetings to guide and implement GFR-related HTDM activities.

The GFR HTDM and codification requirements for pressure vessel, piping, and heat exchangers are included in the NGNP plans. However, the metallic pressure vessel will experience higher dose levels than the NGNP design, as will the reactor vessel internals, core, and core internals. Further, HTDM for NGNP did not include any efforts for core internals or core supports. Hence, the following research must be conducted to assess the viability of materials for the GFR.

3.4.7.1 Experimental HTDM R&D Plans

Detailed inelastic analysis must be conducted. This will help designers assess the limitations of the vessel internals materials with respect to time-independent, time-dependent, ratcheting limits, accelerated creep damage, creep-fatigue, creep buckling, flaw sensitivity (fracture toughness) and multiaxial effects. Further, the same issues must be examined for possible deleterious effects due to the high radiation levels. Scoping tests will be conducted and compared with analytical and numerical predictions or irradiated vs. unirradiated material. These efforts will apply to 2 1/4Cr, the modified 9Cr alloys, and may be extended to one of the best candidates the class 12Cr or 3Cr alloys. Similar efforts will be needed to asses the viability of ODS, intermetallics and the ferritic-martensitc alloys for core components and reactor internals. An estimate of the schedule and required funding for the exploratory testing of metallic candidate materials is provided in Table 39.

Table 39. Schedule for GFR high temperature design methodology research.

Task	FY05	FY06	FY07	FY08	FY09	FY10	TOTAL
Supplemental Testing		150	300	800	800	600	2,650
Analytical Methods Development		50	250	400	500	500	1,700
Codes and Standards Interactions		50	50	50	50	50	250
TOTAL	0	250	600	1,250	1,350	1,150	4,600

3.5 Potential Candidate Materials Selections and Research Plans for Nuclear Hydrogen Systems

Examining the conditions under which the components of the three nuclear hydrogen generation systems will operate has allow the areas of needed materials research areas to be identified that must be addressed before the systems can be deployed. While this research covers issues of materials compatibility, high-temperature strength and stability of materials, and fabrication technologies, the near-term focus will be primarily on materials compatibility.

3.5.1 Potential Candidate Materials and Research Needs for SI System Components

3.5.1.1 Operating Conditions and Candidate Materials for SI System Components

The SI process can be readily broken down into the three sections listed above, but to investigate the issues associated with materials selection and qualification it is necessary to examine the conditions that exist for the components within each section of the process. Since the number and type of components within the individual sections are quite varied and are still being refined with regard to their exact operating conditions, it is useful to group the components into categories in which a set of conditions can be established that are expected to envelop their operation. These bounding conditions can then be used to examine the materials issues of greatest concern to the SI process.

The bounding operational conditions for the three sections of the SI system that are expected to provide the greatest materials challenges are listed by section along with candidate materials identified for them in Table 40. Materials challenges and prioritized materials research topics associated with the different sections are provided below.

3.5.1.2 Prioritized Research Needs for SI System Components

Section 1 – Sulfuric Acid and Hydriodic Acid Generation
The major components in this section of the SI system are faced primarily with issues of corrosion, in as much as they all operate at very modest temperatures where long-term strength and stability of the materials is of little concern. It is useful to consider the vessels that contain the corrosive reactants separately from the internal components where heat transfer is a significant issue. Since the vessels operate at low temperatures, it is anticipated that they can be constructed of low-alloy steels and protected with fluorocarbon coatings or liners, such as Teflon, Kynar, or even polyethylene or polypropylene in the less aggressive environments. While the effectiveness of these protective coatings will need to be evaluated, this area of materials research is considered to be of relatively low priority. For the internal components in section 1, including the numerous types of heat exchangers required, the challenge is greater since the environments described in Table 40a are quite aggressive. Screening of highly corrosion resistant metals and alloys including Ta, Zr, B2, 242, and Hastelloy C-276, as well as monolithic ceramics, such as Si_3Ni_4, SiO_2, Al_2O_3, and Nb-1Zr- coatings is recommended. As historical work has indicated that the corrosion challenges in this section can likely be met, the initial corrosion screening of these materials are considered to be a medium priority.

Section 2 – Sulfuric Acid Concentration and Decomposition
Even though the SI system Section 2 lists only the two areas of concentration and decomposition explicitly, the materials challenges can be best examined over three ranges of temperature and corresponding reactant chemistries as summarized in Table 40b. In this section of the system, sulfuric acid is heated from low temperature to the point at which it decomposes. Throughout the section, process heat from the nuclear island will be supplied to

the reactants via integral heat exchangers in the chemical reaction vessels. The heat transfer medium for the nuclear island is expected to be either high-pressure helium or molten salt. While the majority of corrosion concerns for the process components will be those related to the reactant stream, there are also concerns that arise on the primary side of the heat exchangers associated with the process fluids at very high temperatures. Selection of candidate materials and their screening includes considerations of interactions on both the primary side with heat transfer fluids and on the secondary side with chemical reactants.

Table 40. Operating conditions and materials candidates for major sections of an SI nuclear hydrogen generation plant.

a. Section 1 – Sulfuric Acid and Hydriodic Acid Generation

	Temperature (□C)	Pressure (MPa)*	Chemical Environment	Material Candidates
S-I Bunsen Reaction				
Main Reactor HX	120 - 130	0.1 - 0.3	8 wt% H_2O 2 wt% H_2SO_4 80 wt% I_2 7 wt% HI 0.5 wt% O_2 1.7 wt% SO_2	Ta, Zr, Si_3Ni_4, SiO_2, Al_2O_3, B2, 242, Hastelloy C-276, and Nb-1Zr- coating
H_2SO_4 Boost Reactor	120 - 130	0.1 - 0.3	57 wt% H_2SO_4 43 wt% H_2O 0.1 wt% SO_2 trace I_2	
HI Phase SO_2 Stripper HX	120 - 130	0.1 - 0.3	Trace H_2SO_4 6 wt% H_2O 0.2% wt% SO_2 87 wt% I_2 7 wt% HI	
Vessels for Bunsen Reaction HXs	120 - 130	0.1 - 0.3	Ranges listed above	Florocarbon-lined (Teflon, Kynar, etc.) low-alloy steels

*to obtain pressure in bar, multiply by 10

b. Section 2 – Sulfuric Acid Concentration and Decomposition

	Temperature (□C)	Pressure (MPa)*	Chemical Environment	Material Candidates
S-I H_2SO_4 Concentrator				
Primary Side	<450	0.1-6.8	He/molten salt	Hastelloy B2 & N, SiC, C-C composites, C276, 800/800H, Hi-Si steel (Duriclor 51M), glass-lined steel, Nb coatings
Secondary Side	<400	0.1	0 - 0.1 wt% SO_2 57 Š 98 wt% H_2SO_4 2 - 42 wt% H_2O trace I_2	
S-I H_2SO_4 Vaporizer				
Primary Side	580 to 380	0.1-6.8	He/molten salt	Hastelloy B2, G, & N, SiC, C-C composites, Si_3Ni_4, C276, 800/800H, Hi-Si steel (Duriclor 51M), glass-lined steel, Nb coatings
Secondary Side	330 to 530	0.7	Liquid Š Vapor 98 - 71 wt% H_2SO_4 0 - 22 wt% SO_3 2 - 7 wt% H_2O	
S-I H_2SO_4 Decomposer				
Primary Side	950 to 800	0.1-6.8	He/molten salt	Hastelloy B2, SiC, C-C composites, Si_3Ni_4, 242, 214, 800HT, Nb-1Zr, Au-, Pt-, Fe_3Al- & glass-coatings, Pt-, Cu-, & Fe_2O_3-catalysts
Secondary Side	530 to 900	0.7	Inlet Š Outlet 71 - 20 - wt% H_2SO_4 22 - 13 wt% SO_3 7 - 16 wt% H_2O 0 - 40 wt% SO_2 0 - 10 wt% O_2	

*to obtain pressure in bar, multiply by 10

Table 40. Operating conditions and materials candidates for major sections of an SI nuclear hydrogen Generation plant. (cont)

c. Section 3 – Hydrogen Iodide Decomposition

	Temperature (°C)	Pressure (MPa)*	Chemical Environment	Material Candidates
S-I HIx Reactive Distillation				
Inlet feed stream	262	2.2	11 wt% HI 81 wt% I_2 8 wt% H_2O	Ta, Ta-10W, Mo, Nb, Nb-1Zr, Zircaloy 702, SiC, Vitreous carbon, C-C composites, Bulk metallic glasses
Outlet column bottom	310	2.2	1 wt% HI 98 wt% I_2, 1 wt% H_2O	
H_2 Scrubber/Condenser	221 to 25	2.2	66 wt% HI 32 wt% H_2O 2 wt% H_2	
S-I HIx Phosphoric Acid Reactor				
Concentrated H_3PO_4	132-211	0.1	96 wt% H_3PO_4 4 wt% H_2O	TBD based on relevant industrial experience
Column feed	120-241	0.3 - 0.9	74 wt% H_3PO_4 11wt% HI 10 wt% H_2O 4 wt% I_2	
Dilute H_3PO_4	250	0.95	87 wt% H_3PO_4 13 wt% H_2O	
Iodine outlet	120	0.2 - 0.7	0.1 wt% H_2O 99.9 wt% I_2	

*to obtain pressure in bar, multiply by 10

In the coolest portion of Section 2, sulfuric acid is heated to about 380°C while its concentration increases to about 90 wt%. Since the corrosive effects of the sulfuric acid change markedly over this temperature and concentration range, it is recommended that corrosion screening of candidate materials be performed in the temperature range of 25 – 175°C at concentrations of 50 – 75% sulfuric acid, as well as between 175 – 380°C at sulfuric acid concentrations of 75 – 90%. At the lower temperatures, materials to be screened include Hastelloy B2 and N, C-276, C/C composites, and glass-lined steel. At the higher temperatures, C/C composites, Hastelloy N, and glass-lined steel should also be screened along with 800H, high-Si steels, and coatings or claddings of Au, Pt, and Nb. Since this is a critical step for which material performance has not been demonstrated, this area of research is a very high priority in the overall program. If the high-Si steels perform acceptably, it will also be necessary to investigate their fabricability and weldability, since these issues are known to be problems in this class of materials. It will also be necessary to explore the technologies available for cladding or coating structural components reliably and with adequate long-term retention of properties with the materials identified.

The intermediate temperature range in this section includes the components in which the sulfuric acid is vaporized, from about 330 – 550°C and is the most aggressive with regard to environmental attack on structural materials. Hastelloy B2, G, and N, C-276, Alloy 800/800H, SiC, Si_3N_4, C/C composites, glass-lined steel, and coatings or claddings of Au, Pt, and Nb are

considered to have the highest probability of surviving in this environment and will need to be screened. This is considered a very high priority materials issue.

The highest temperature range for components in this section is that portion where the sulfuric acid is decomposed prior to its introduction into the Bunsen section. Temperatures of the reactants range from about 550°C to as high as 900°C with temperatures of the heat transfer media in the 800 – 950°C range. High-temperature strength and creep resistance are significant issues at these temperatures, as well as the corrosion behavior of the components.

At these temperatures, corrosion on the primary side of the heat exchanger structures must be considered an important variable in selecting and evaluating the behavior of materials candidates. If the process heat media is helium, Hastelloy B2, 242, 214, Nb-1Zr, Alloy 800HT, SiC, Si_3N_4, C/C composites, glass-lined steel, and coatings or claddings of Au, Pt, and Nb are potential candidates for joint service with the sulfuric acid. If the process-heat transfer media is molten salt, only 214, Nb-1Zr, and C/C composites are still considered as viable. All these materials will needed to be screened for corrosion resistance. Additionally, the creep strength of the metals must be assessed at the service conditions, as will be the fabricability of the 214. The resolution of all these issues, while important to the operation of the systems, are considered as a medium priority to materials R&D, since existing information is moderately encouraging about performance under these conditions.

Since many of the challenges associated with the decomposition of sulfuric acid are driven by the very high temperatures needed to adequately drive the required chemical reactions forward to completion, it would be very useful to utilize other approaches that could provide the same result at lower temperatures. An approach that has the strong potential to reduce the temperatures required for this process, and the associated materials challenges, is the use of selectively permeable, high-temperature, inorganic membranes for separation and concentration of the desirable reactant species. Such membranes have been developed and very successfully used under other DOE programs but have not been evaluated for service under the conditions of interest for the SI process. However, membrane fabrication technology has already been demonstrated for both metallic and ceramic materials that would be candidates for SI service conditions. Particular issues that need to be addressed for potential membrane use in Section 2 of the SI process include: 1) appropriateness of materials of construction with regard to high-temperature strength, corrosion resistance, and durability; 2) identification of processing parameters and resultant membrane structures most appropriate for separation of the particular chemical species of concern; and 3) assessment of separation performance under operating conditions. Considering that the successful use of inorganic membrane technology has the potential to not only reduce the substantial materials challenges in the high-temperature section of the SI process, but, even more significantly, to reduce the temperature requirements of the nuclear reactors that would supply the process heat to the process, this area of material research is a very high priority.

Section 3 – Hydrogen Iodide Decomposition

Materials considerations for both the reference design for hydrogen iodide decomposition by reactive distillation and for the phosphoric acid reactor are described below and summarized in Table 40c.

In the reactive distillation column, the input stream reacts to form a liquid output stream containing the majority of the iodine dissolved in water, and a gaseous output stream of hydrogen, steam, and HI that is scrubbed and cooled to remove the HI and water from the hydrogen. The hydriodic acid in the three process streams is extremely corrosive, so

construction materials will be severely challenged. Candidate materials have been identified but will need to be evaluated for their corrosion resistance as a very high priority task in the materials program.

As an alternative process, phosphoric acid can be added to the water, iodine, HI solution from the Bunsen reaction to produce two immiscible solutions—one containing iodine and the other containing phosphoric acid, water and HI. The HI can then be separated from solution by distillation and broken down into hydrogen and iodine by either liquid- or gaseous-phase decomposition. A range of phosphoric acid concentrations are used in the process, some in combination with the other components, but based on industrial experience, there are fairly well established ways to deal with the corrosion of the expected process streams. Surveying industrial approaches to handling these process streams is a medium priority to ensure that commercial approaches and materials are appropriate.

3.5.2 Potential Candidate Materials and Research Needs for Ca-Br System Components

3.5.2.1 Operating Conditions and Candidate Materials for Ca-Br System Components

Description of the functions of the major Ca-Br system components is provided below. Their operation conditions and the candidate materials identified for them are listed in Table 41.

Steam Superheater
High-temperature steam to be supplied to the reaction beds in the Ca-Br hydrogen production process is heated in a superheater using process heat from the nuclear island. It is anticipated that either compressed helium or molten salt will be the operative heat transfer fluid for delivery of nuclear heat.

Ca-Br Reaction Bed
Virtually all the chemical reactions in the Ca-Br-based hydrogen production system, except the HBr dissociation step will take place in the reaction beds. These will include the reactions described in previous sections for the production of HBr in the reactant stream and CaO in the bed itself during the forward reaction, and the production of O_2 in the reactant stream and $CaBr_2$ in the bed itself during bed regeneration. Since the reaction bed hardware must function and survive in both production and regeneration modes, the materials of construction will have a range of challenges.

The major components within the reaction bed are envisioned to be 1) a reaction vessel, which may or may not be thermally insulated, to contain the bed; 2) an integral heat exchanger within the bed itself to provide or remove the heat required for the endothermic or exothermic reactions for the forward and regenerative modes of operation; 3) the solid reactant materials comprising the beds themselves; and 4) the bed supports, which may include catalytic materials.

Ca-Br HBr Heat Exchanger
Since the operative temperature of the plasmatron is significantly cooler than the discharge temperature of the HBr from the reaction bed, it will necessary to cool the reactant stream before it reaches the plasmatron in an intermediate heat exchangers.

Ca-Br Plasmatron
The decomposition of HBr to H_2 and Br_2 using plasma-chemistry dissociation takes place at modest process conditions (~100°C and atmospheric pressure or below) in the plasmatron.

Table 41. Operating conditions and materials candidates in a Ca-Br plant.

	Temperature (□C)	Pressure (MPa)*	Chemical Environment	Material Candidates
Reaction Beds During HBr Production				
HX Primary Side	750	0.1	He/molten salt	Hastelloy N, 232, 214, 713 cast, RA330
HX Secondary Side			100%$CaBr_2$ & H_2O to 100%CaO & HBr	
Bed Supports			100%$CaBr_2$ & H_2O to 100%CaO & HBr	Ceramics/Catalysts TBD
Reaction Vessel	300-750	0.1	100% H_2O & 0% HBr to 0% H_2O & 100% HBr with trace O_2	If insulated Ni-Clad low alloy steel, If not 713LC, 214, Ni_3Al, 956MA, 754MA
Reaction Vessel Insulation	750	0.1		$CaTiO_3$, Al_2O_3
Reaction Beds During Regeneration				
HX Primary Side	<590	0.1	He/molten salt	Hastelloy N, 232, 214, 713 cast, RA330
HX Secondary Side			100% Br_2 & CaO to 100% CaBr & O_2	
Bed Supports			100% Br_2 & CaO to 100% CaBr & O_2	Ceramics/Catalysts TBD
Reaction Vessel	200-590	0.1	100% Br_2 & 0% O_2 to 0% Br_2 & 100% O_2	If insulated, Ni-Clad low alloy steel, If not, 713LC, 214, Ni3Al, 956MA, 754MA
Reaction Vessel Insulation	<590	0.1		$CaTiO_3$, Al_2O_3
Reaction Bed to Plasmatron HX				
Primary Side	750 to 50	0.1	100% HBr & 0.1% H_2O to 3% Br_2 & 97% HBr with trace H_2O	Ni, B2, 214, 232, Hastelloy N, stainless steel, Si_3N_4, Nb-1Zr
Secondary Side	25	0.1	H_2O	
Plasmatron				
Inlet	50	0.1	3% Br_2 & 97% HBr with trace H_2O	300 series stainless steel
Outlet	<<300	<0.1	50% HBr, 25% H_2 & 25% Br_2	
Multiple-stage Compressors	100-335	0.005 to 3.5	30% H_2, 4% Br_2 & 2% H_2O	TBD based on industiral experience
Steam Superheater				
Primary Side	750-850	6.8/0.1	He/molten salt	617, 625, 230, B2, 214, 242, Hastelloy N
Secondary Side	750	0.1	H_2O	

*to obtain pressure in bar, multiply by 10

While important from a process perspective, there are no significant materials challenges envisioned for the construction or operation of the plasmatron.

Ca-Br Compressors

Following the production of H_2 and Br_2 in the plasmatron, a series of compressors is required to achieve the pressure required for pressure swing absorption separation of the bromine from the hydrogen process stream and eventual transmission or storage of the hydrogen. At this point in time, it is not clear whether the compressors will be centrifugal or reciprocating pumps. In any case, the anticipated conditions for these components appear to be within existing industrial

experience, so a survey of industrial practices is expected to provide significant guidance on materials selection and screening. Fairly minor materials issues are expected for these components.

3.5.2.2 Prioritized Materials Research Needs for Ca-Br System Components

Steam Superheater
Whether the high-temperature process heat for the Ca-Br steam superheater will be supplied using high-pressure helium or molten salt will be the major parameter in selecting and qualifying a material for service in this component, since the material compatibility issues are so different. While materials screening for corrosion on the steam side will be required for all the materials candidates, molten salt service will limit these candidates and require appropriate corrosion screening for Hastelloy N (for temperatures up to 750°C), B2, 242, and 214. Candidates for helium service would include 617, 625, 230, B2, and 214. Additionally, given the relatively low fabricability and weldability of alloy 214, an assessment of it would be required. Since it anticipated that some of the alloys being considered would function under the conditions envisioned for the superheater, and the major question is service life, not viability, this area is given a medium priority.

Ca-Br Reaction Bed
Insulated reaction vessel—If the reaction vessel is thermally insulated, it is anticipated at a nickel-clad low-alloy pressure vessel material would meet the needs of the component. However, the nickel cladding would need to be evaluated for corrosion resistance at the temperatures and fairly wide range of chemical compositions associated with the forward and regeneration modes of operation of the bed. This research is given a medium priority.

Uninsulated reaction vessel—If the vessel is not insulated, the materials challenges become much more significant. The high-temperature and aggressive environments of both modes of operation dramatically limit the candidate materials to classes of materials that have both very good high temperature strength and form very stable surface layers for corrosion resistance. Fabricability of these materials is an issue, particularly for the castable 713LC that should be investigated at a medium priority level. Evaluating the corrosion resistance of the materials would be a high priority if the decision is made to use an uninsulated vessel.

Integral reaction bed heat exchanger—No significant high-temperature strength or corrosion issues are expected for this component with respect to the molten salt or helium environment on the primary side. However, the corrosion resistance of the candidate materials over the temperatures and fairly wide range of chemical compositions associated with the forward and regeneration modes of operation of the bed must be ascertained to see which, if any, candidate materials will offer acceptable service. This is a high materials R&D priority.

Bed reactant materials and supports—The composition of the reactant and catalytic materials in the beds are defined by the chemical reactions in which they are involved as described in the preceding sections. The unknowns at this point primarily involve the detailed form in which the reactants will fabricated and how they will be supported. Until additional information becomes available to better describe the geometries and materials forms to be utilized, the required experimental program to assess these materials cannot be defined.

Ca-Br HBr Heat Exchanger
The compositions under which the primary side of this heat exchanger will operate in cooling the process gas from the reaction beds before its introduction to the plasmatron are quite novel by

industrial experience. Obtaining the corrosion resistance needed with adequate strength at the higher temperatures of operation that will exist in this device or series of devices is anticipated to be very challenging. As suite of high temperature alloys and structural ceramics has been identified as candidate materials, and a very high priority for the NHI materials program will be to evaluate their corrosion resistance in the 500 to 750°C temperature range. Additionally, if either 214 or silicon nitride are identified as particularly promising, an assessment of their fabricability will be required, as well.

Ca-Br Plasmatron
The modest operating conditions of this device will not present any significant materials challenges that cannot be readily addressed with traditional construction materials.

Ca-Br Compressors
Once the decision is made whether the compressors will be centrifugal or reciprocating, screening of materials suggested by industrial use may need to be done in the temperature and environments of interest. This decision will be made at a later date.

3.5.3 Potential Candidate Materials and Research Needs for HTE System Components

3.5.3.1 Operating Conditions and Candidate Materials for HTE System Components

The anticipated operating conditions and materials candidates for the major HTE components are shown in Table 42.

Electrolytic Cell Materials
Interconnect Plate—The interconnect plate between adjacent planar cells represents one of the key materials challenges in the development of high-temperature electrolysis. Operation of SOFCs or solid oxide electrolytic cells above about 800°C will require the use of ceramic bipolar plates, with attendant cost and fabrication challenges. Below 800°C, it would be desirable to use metallic interconnection plates to minimize fabrication challenges and costs of the cells. However, the combination of requirements for structural stability and corrosion resistance of the interconnects in the anticipated ranges of process stream components, in conjunction with their need for adequate electrical conductivity, severely limits metallic candidate materials. As with other components, the conditions for the interconnect plate are quite severe in the

SOFCs being developed by the DOE-FE programs. Therefore, the FE program will be an important source of research for potential HTE materials. However, the effects of the unique chemical environment, containing the virtually pure oxygen that exists in the HTE system cell, on materials for service as interconnects will require assessment within the NHI program.

Other Electrolytic Cell Components—The other major components within the electrolytic cell include the ceramic electrolyte, anode, and cathodes, as well as the seals at the edges of the cells. Materials R&D within the DOE-FE program is expected to adequately address these components, hence they are not included in the NHI materials studies.

Table 42. Operating conditions and materials candidates in a HTE plant.

	Temperature (□C)	Pressure (Mpa)	Chemical Environment	Material Candidates
HTE Electrolytic Cell Components				
Cathode Inlet	800-900	2.5	90 v/o H_2O, 10 v/o H_2	Ni-ZrO_2
Cathode Outlet	800-900	2.5	10 v/o H_2O, 90 v/o H_2	Ni-ZrO_2
Electrolyte	800-900	2.5	n/a	YSZ, LSGM
Anode	800-900	2.5	O_2 (+diluent?)	LSM
Bipolar plate	800-900	2.5	H_2O/O_2 on one side, O_2 (+ diluent?) on other	La(Ca) CrO_3
Interconnects	600-850	2.5	H_2O, O_2, H_2	Low volatility chromia formers or reduced reaction-rate alumina formers
Balance of Plant Components				
Steam-Hydrogen Separator/Recuperator				
Primary Side	700-850	2.5	variable H_2O-H_2	214, MA956, MA75
Secondary Side	25 to 450	2.5	H_2O	
Steam-Hydrogen Separator/Membrane				
Primary Side	800-900	2.5	90 v/o H_2O, 10 v/o H_2	Al_2O_3, Cr_2O_3
Secondary Side	800-900	2.5	H_2, <1 v/o H_2O	
Hydrogen Cooler/Recuperator				
Primary Side	850 to 25	2.5	H_2, <10 v/o H_2O	214, MA956, MA754
Secondary Side	25 to 450	2.5	H_2O	
Oxygen Cooler/Recuperator				
Primary Side	850 to 25	2.0-3.5	O_2 (+diluent?)	617, 230, B2, 214,
Secondary Side	25 to 450	2.5	H_2O	ceramic oxides
Steam Superheater				
Primary Side	900-950	6.8/0.1	He/molten salt	617, 625, 230, B2,
Secondary Side	750-850	5	H_2O	214, 242

Steam-Hydrogen Separator

Separation of the hydrogen-steam mixture exiting from the HTE cells can be done either through condensation of the steam or through the use of a high-temperature, selectively permeable membrane. Condensation requires heat exchangers for cooling the mixture and reheating of the condensed water, lowering the overall efficiency of the process. The use of an inorganic, hydrogen permeable membrane would allow nearly isothermal and constant pressure operation of the electrolytic plant. The durability and performance of such a membrane in the reducing environment of the 800°C steam-hydrogen mixture will have to be investigated. Following the separation of the process stream, the hydrogen product will be cooled and collected for use and the water will be recycled back into the feed stream for the HTE cells.

Hydrogen-Cooling Heat Exchanger

If membranes are successfully used for high-temperature separation of hydrogen from the HTE cell, it will necessary to cool the hydrogen, prior to its collection for storage or transmission. If possible, this will be done with a recuperative heat exchanger to provide heating of the HTE-cell feed stream. If materials or system constraints do not permit the cooling from the very high temperatures typical of cell output conditions, it may be necessary to cool the hydrogen via adiabatic expansion to the point that it can be reasonably handled. Because of the reducing conditions, the use of metal heat exchangers for cooling the hydrogen flow should be feasible.

Oxygen-Cooling Heat Exchanger

If the waste heat from the high-temperature oxygen stream is to be recovered for feed water heating, significant materials challenges are anticipated for the heat exchanger and associated piping that will comprise the recuperator utilized to cool the exiting oxygen stream. If no diluent

(e.g. nitrogen or air) is used, the piping and heat exchangers needed will be exposed to extremely oxidizing conditions. If the primary surfaces of the oxygen cooler cannot be adequately protected, possibly with a noble metal or ceramic layer, it may be also be necessary to cool the oxygen via adiabatic expansion to the point that it can be reasonably handled.

Steam Superheater
The steam feed to the HTE cell must be heated to the desired process temperature in the steam superheater. The steam input to the superheater will come from some combination of the output of the steam-hydrogen separator, the hydrogen and oxygen heat exchangers, and an auxiliary make-up source. The high-temperature process heat for the superheater will be supplied by the nuclear island and likely consist of either high-pressure helium or molten salt.

3.5.3.2 Prioritized Materials Research Needs for HTE System Components

HTE Cell Interconnect Plate
Ascertaining whether or not it will be possible to use metallic interconnects in the HTE cell will primarily be determined by the response of the material in high-oxygen content at temperatures up to 850°C. No existing metallic materials have been identified that are known to adequately function in these conditions. While alumina-scale forming metals would likely have the corrosion resistance for such service, they are very difficult to form and would likely develop a surface layer that is too electrically insulating to be acceptable. The only other class of alloys that might perform adequately are the chromia-scale forming materials but the high inherent volatility of chromium at such service conditions would likely make these alloys unstable in thin sections.

A possible path to developing metallic interconnects might be to modify existing alumina-forming alloys to reduce the rate at which they form insulating scale or to modify chromia forming alloys to minimize the rate of chromium volatilization. Since there is the alternative of using ceramic interconnects or running the cell at lower temperatures to meet the early needs of demonstrating nuclear HTE technology, even at an elevated system cost, the priority of this research was judged to be medium.

Steam-Hydrogen Separator
The class of materials most likely to operate at the high temperatures and hydrogen contents required for a steam-hydrogen separation condenser is that of alumina-scale forming alloys. These materials are inherently hard to form and very challenging to weld. Corrosion, fabrication, and welding screening of these materials will need to be evaluated. Considering that dropping the required operating temperatures for this component may be possible by adiabatic expansion, these materials issues are given a medium priority.

If the separation of the hydrogen-steam mixture exiting from the HTE cells could be done through the use of a high-temperature, selectively permeable membrane, the overall efficiency and economy of the process could be significantly improved. The existing technology for producing inorganic selectively permeable membranes that are appropriate for hydrogen is already well established. The questions relate to the selecting materials that are stabile in the service environment and offer high separation efficiencies. The ceramic materials listed in Table 42 are likely candidates. Considering that there are technologies and materials likely to provide steam-hydrogen separation, this work could be addressed at a medium priority in the near term while the program focuses on viability issues. However, given the likelihood of success and strong potential impact on efficiency and economics, it should be addressed at a higher priority as the program proceeds.

Hydrogen-Cooling Heat Exchanger
The class of materials most likely to operate at the high temperatures and hydrogen contents of this component are alumina-scale forming alloys. The same materials issues and approaches to addressing the steam-hydrogen separation by condensation are also applicable to this component. Considering that dropping the service temperature for this component may be possible by adiabatic expansion, even though less energy will be recovered, this is not a significant viability issue, hence it is given a medium priority.

Oxygen-Cooling Heat Exchanger
The anticipated service conditions of very high temperature and oxygen contents on the primary circuit side of this component provide a particular challenge for materials. No existing material candidates have been identified that meet all service requirements. The alloys identified in Table 42 might be useable, but corrosion testing will be required to ascertain if lifetimes are long enough to be considered. It may also be possible to consider the class of ceramic oxides if fabrication issues and the relatively low thermal conductivity of these materials do not preclude them. Considering that dropping the service temperature for this component may be possible by adiabatic expansion, even though less energy will be recovered, this is not a significant viability issue. Moreover, since the likelihood of success is not considered high, this area is given a low priority.

Steam Superheater
Whether the high-temperature process heat for the superheater will be supplied using high-pressure helium or molten salt will be the major parameter in selecting and qualifying a material for service in this component, since the material compatibility issues are so different. While materials screening for corrosion on the steam side will be required for all the materials candidates, molten salt service will limit these candidates and require appropriate corrosion screening for B2, 242, and 214. Candidates for helium service would include 617, 625, 230, B2, and 214. Additionally, given the relatively low fabricability and weldability of alloy 214, an assessment of it would be required. Since it anticipated that some of the alloys being considered would function in the superheater, and the major question is service life, not viability, this area is given a medium priority.

3.5.4 Summary of High Priority Materials Research Areas for Nuclear Hydrogen Production

A wide range of materials research areas have been identified that will need to be addressed before the three systems proposed for nuclear hydrogen production can be deployed. This research covers issues of materials compatibility, high-temperature strength and stability of materials, and fabrication technologies. However, a number of key areas were identified as particularly high priority items that must be addressed early in the program. These areas are summarized below and included in Table 43. Obtaining the candidate materials identified and evaluating them under the environmental conditions that will envelop their service will comprise the next steps for the NHI materials program.

Table 43. Summary of high priority materials research issues for the NHI program.

System	Component	Research Focus	Comment
SI	H_2SO_4 Concentrator	Corrosion screening	Technical viability issue
	H_2SO_4 Vaporizer	Corrosion screening	Technical viability issue
	HI Reactive Distillation Column	Corrosion screening	Technical viability issue
	Inorganic Membranes	Performance and corrosion screening	Technical viability issue
Ca-Br	Reaction Bed HX	Corrosion screening	Technical viability issue
	Ca-Br/HBr Hx	Corrosion screening	Technical viability issue
	Reaction Bed Vessel	Corrosion screening	Technical viability, if not internally insulated
HTE.	Metallic Inteconnects	Protective surface layer modifications	Economic viability issue
	Steam-Hydrogen Separator	Corrosion screening	Economic viability issue
	Oxygen HX	Corrosion screening	Economic viability issue
	Hydrogen HX	Corrosion screening	Economic viability issue
	Inorganic Membranes	Performance and corrosion screening	Economic viability issue

3.5.4.1 High-Priority Materials R&D for the SI System

Three areas of materials compatibility research were identified for the SI system as very high priority issues. These include the screening of materials for service in both the concentrator and vaporizer portions of the sulfuric acid concentration and decomposition section and those used in the reactive distillation column of the hydrogen iodide decomposition section. At the present time, candidate materials have been identified for these service conditions, but the environments are known to be extremely aggressive and performance of even the most promising materials is not adequately established to ensure system viability.

The one additional area of high priority research identified for the SI system was the assessment of high-temperature inorganic membranes for separation of decomposition products of sulfuric acid to potentially reduce peak required temperatures, and associated structural materials requirements, in the hydrogen generation plant and the nuclear reactor providing the process heat.

3.5.4.2 High-Priority Materials R&D for the Ca-Br System

One area of materials research judged to be of high priority for the Ca-Br systems is that of corrosion screening of the materials for the internal heat exchanger within the reaction beds. The wide range of high operating temperatures and widely varying reactants in which these heat exchangers will operate as the beds change from modes of production, where HBr is replaced by steam, to regeneration, where bromine is replaced by pure oxygen, will create a significant challenge for the heat exchanger materials.

Investigation of the corrosion resistance of materials for the heat exchanger that will cool the process stream from the reaction beds prior to its introduction into the plasmatron, where the combination of the HBr, bromine, and water must be accommodated is also a very high priority.

The final area that may or may not be a high priority for the Ca-Br system is that of the vessel materials that will enclose the reaction beds. If the decision is made to internally insulate this vessel, the reduction in temperature will allow the use of nickel-clad, low-alloy steel. However, if the vessel is not insulated from the operating temperatures required for the bed, the corrosion resistance of the limited materials identified as possible candidates for that application will need to be screened as a high priority task.

3.5.4.3 High-Priority Materials R&D for the HTE System

Several areas of research were identified for the HTE system that will need to be addressed to assess if materials are available to enable higher efficiency operation and improved economic viability. These include materials for metallic interconnects in the electrolytic cell, as well as materials to enable higher temperature operation of the steam-hydrogen separator and the recuperators for hydrogen and oxygen cooling. Since alternate approaches are available, such as ceramic interconnects or partial adiabatic cooling, these issues should not affect the operational viability of the system and, hence, were not judged to be a high technical priority. If the economic consequences of using the more expensive or less efficient alternate approaches are later judged to affect the overall viability of the system, these issues should be given a high priority in the NHI materials program.

The only other issue that might also be raised to a high priority on economic grounds is the investigation of the use of organic membranes to enable nearly isothermal (and hence much more economical) separation of hydrogen from steam in the output stream from the cell.

3.5.5 Schedule and Funding Requirements for Nuclear Hydrogen Production Materials

The overall schedule and associated funding requirements for the materials R&D needed for the NHI program are driven by the need to deploy redundant hydrogen generation technology demonstration facilities in conjunction with the deployment of the NGNP, now expected before 2020. To deploy demonstration-scale hydrogen generation capacity (≈50MW) as part of the NGNP, will require intermediate technology scale-up demonstrations. It is currently expected this be done in three phases by demonstrating hydrogen generation capability at the lab scale (≈1 kW) by about 2006 and the pilot-plant scale (500kW-1MW) by about 2010, prior to the final demonstration scale by about 2017.

Given the unknowns of both the design details of the nuclear hydrogen generation systems and the materials needed for their construction, this is a very aggressive schedule. At the current time, details of experimental plans, their schedule, and associated funding requirements are being developed. This information is expected to be included in future revisions of this R&D plan.

References

[1] G .O. Hayner, E. L. Shaber, R. E. Mizia, P. A. Lessing, R. N. Wright, T. C. Totemeier, W. E. Windes, W. R. Corwin, T. D. Burchell, J. M. Corum, J. W. Klett, R. K. Nanstad, L. L. Snead, R. E. Stoller, P. L. Rittenhouse, R. W. Swindeman, D. F. Wilson, November 7,

2003, *Next Generation Nuclear Plant Materials Selection and Qualification Program Plan*. INEEL/EXT-03-01128

[2] J. Buongiorno, INEEL, P. MacDonald, INEEL (contractor), W. R. Corwin, L. K. Mansur, R. K. Nanstad, R. W. Swindeman, A. F.Rowcliff, D. F. Wilson, I. G. Wright, ORNL, G. Was, Univ. of Michigan, September 2003, *Supercritical Water Reactor (SCWR) Survey of Materials Experience and R&D Needs to Assess Viability*. INEEL/EST-03-00693 (Rev. 1)

[3] W. R. Corwin, et al., The Gas Fast Reactor (GFR) Survey of Materials Experience and R&D Needs to Assess Viability, ORNL/TM-2004/99, April 30, 2004 (Draft)

[4] T. Allen, ANL, R. Klueh, ORNL, N. Li, LANL, July 25, 2003. *Lead-Cooled Fast Reactor (LFR) Survey of Materials Research and Development Needs*

[5] *2001 ASME Boiler and Pressure Vessel Code, Sect. III, Subsect. NH, Rules for Construction of Nuclear Facility Components, Class I Components in Elevated Temperature Service,* Am. Soc. of Mechanical Engineers.

[6] J. M. Corum and W. K. Sartory, "Assessment of Current High-Temperature Design Methodology Based on Structural Failure Tests," *Trans. of the ASME, J. of Pressure Vessel Technology,* **109**, 160-168, May 1987.

[7] V. N. Shah, S. Majumdar, and K. Natesan, *Review and Assessment of Codes and Procedures for HTGR Components*, NUREG/CR-6816 (ANL-02/36), Argonne National Laboratory, June 2003.

[8] D.S. Griffin, "Elevated-Temperature Structural Design Evaluation Issues in LMFBR Licensing," *Proceedings of Eighth International Conference on Structural Mechanics in Reactor Technology*, Vol. L, Paper L9/1, Brussels, August 1985.

[9] K. Tsukimori, et al., "Development of FBR Piping Bellows Joints in Japan," *Nuclear Engineering and Design,* **155,** 571-589, May 1995.

[10] J. M. Corum and J. J. Blass, "Rules for Design of Alloy 617 Nuclear Components to Very High Temperatures," *Fatigue, Fracture, and Risk*, PVP–Vol. 215, 147-153, Am. Soc. of Mechanical Engineers, 1991.

[11] F. Schubert, G. Breitbach, and H. Nickel, "German Structural Design Rule KTA 3221 for Metallic HTR-Components," *High-Temperature Service and Time-Dependent Failure*, PVP–Vol. 262, 9-18, Am. Soc. of Mechanical Engineers, 1993.

[12] K. Hada, M. Ohkubo, and O. Baka, "Application of New Design Methodologies to Very High-Temperature Metallic Components of the HTTR," *Nuclear Engineering and Design,* **132,** 13-21, 1991.

[13] K. Hada and O. Baba, "Structural Design Code for Very High Temperature Cooled Nuclear Reactor Cooling Components," *High-Temperature Service and Time-Dependent Failure,* PVP–Vol. 262, Am. Soc. of Mechanical Engineers, 1-8, 1993.

[14] H. P. Meurer, H. Breitling, and W. Dietz, "Influence of Hold Time and Strain Rate on the LCF Behavior of Alloy 617 at 950°C," *Proc. of International Conference on Low Cycle Fatigue and Elasto-Plastic Behavior of Materials,* 1987.

[15] K. Branu Sankaro Rao, H.-P. Meurer, and H. Schuster, "Creep-Fatigue Interaction of Inconel 617 at 950°C in Simulated Nuclear Reactor Helium," *Materials Science and Engineering,* **A104,** 37-51, 1988.

[16] D. H. Baldwin, O. F. Kimball, and R. A. Williams, *Design Data for Reference Alloys: Inconel 617 and Alloy 800H,* General Electric Report HTGR 86-041, April 1986.

[17] T. Shimakawa, K. Nakamura, and K. Kobayashi, "Sophisticated Creep-Fatigue Life Estimation Scheme for Pressure Vessel Components Based on Stress Redistribution Locus Concept," *Elevated Temperature Design and Analysis, Nonlinear Analysis, and Plastic Components–2004,* Am. Soc. Of Mechanical Engineers, July 2004.

[18] R. I. Jetter, "An Alternate Approach to Evaluation of Creep-Fatigue Damage for High Temperature Structural Design Criteria," *Fatigue Fracture, and High Temperature Design Methods in Pressure Vessels and Piping,* PVP-Vol.5, Am. Soc. Of Mechanical Engineers, 199-205, 1998.

[19] J. C H Henager and R. G. Hoagland, Acta Mat 49 (2001) 3739.

[20] J. C H Henager, C. A. Lewinsohn and R. H. Jones, Acta Mat 49 (2001) 3727

[21] S. J. Zinkle and N. M. Ghoniem, Fus. Eng. Des. 51-52 (2000) 55.

[22] E. Lara-Curzio, in Comprehensive Composites Encyclopedia vol. 4-21, 2000) p. 533.

[23] S. J. Zinkle and N. M. Ghoniem, Operating temperature windows for fusion reactor structural materials, Fusion Eng. Design 49-50 (2000) 709-717.

[24] S. J. Zinkle, L. J. Ott, D. T. Ingersoll, R. J. Ellis and M. L. Grossbeck, Overview of materials technologies for space nuclear power and propulsion, in M.S. El-Genk (ed.) Space Technology and Applications International Forum-STAIF 2002 (AIP Conf. Proc. vol. 608), American Institute of Physics, 2002, pp. 1063-1074.

[25] R. L. Klueh et al., Tensile and creep properties of an oxide dispersion-strengthened ferritic steel, J. Nucl. Mater. 307-311 (2002) 773-777.

[26] M. K. Miller, E. A. Kenik, K. F. Russell, L. Heatherly, D. T. Hoelzer and P. J. Maziasz, Atom probe tomography of nanoscale particles in ODS ferritic alloys, Mater. Sci. Eng. A 353 (2003) 140-145.

[27] Supercritical Water Reactor (SCWR); Survey of Materials Experience and R&D Needs to Assess Viability, INEEL/EXT-03-00693, Sept 2003

4.0 CROSSCUTTING MATERIALS RESEARCH PROGRAM

Four interrelated technical areas of materials R&D are included within the Gen IV Crosscutting Materials Research Program:

(1) qualification of materials for service within the vessel and core of the reactors that must withstand radiation-induced challenges;

(2) qualification of materials for service in the balance of plant that must withstand high-temperature challenges;

(3) the development of validated models for predicting long-term, physically based microstructure-property relationships for the high-temperatures, extended-operation periods, and high irradiation doses that will exist in Gen IV reactors; and

(4) the development of an updated high-temperature structural design methodology to provide a basis for design, use, and codification of materials under combined time-independent and time-dependent loadings.

Additionally, the overall program management function for the Gen IV Integrated Materials Program is maintained within Crosscutting Materials Research. This includes the development and management of the technical crosscutting research areas, the materials research activities that address reactor-specific and energy-conversion system requirements, and the coordination of U.S. Gen IV materials research with the external domestic programs and international partners.

During the initial two years of the Crosscutting Materials Research Program, the primary activity has been the assessment of materials needs for the Gen IV reactor and NHI system concepts being actively pursued within the U.S. program. The largest aspect of that planning has been working with the SIMS and PMs and their staffs to understand the system and component requirements for each reactor system and, based on those requirements, developing the initial materials R&D programs needed to address the reactor systems. Additionally, the insight gained by understanding those system needs and developing plans to address them is being used to formulate the detailed plans for the four crosscutting materials areas listed above.

The initial detailed assessment of needs, status, and development of the research plans in two of the technical crosscutting areas, microstructural analysis and modeling and high-temperature structural design methodology, are described in reports on those subjects. [1,2] More detailed revisions of the initial plans for crosscutting tasks on materials for high-temperature and radiation service have begun and will be completed in FY 2004. Summaries of the issues, needs, and research thrusts for the four crosscutting technical areas are provided in the sections that follow.

4.1 Qualification of Materials for Radiation Service

Many materials challenges of the service environments within specific reactor concepts of the Generation IV Initiative will be common across the different platforms. Of these common aspects, service temperature and neutron exposure will have the greatest influence on material performance and component lifetime. Therefore, combining the evaluation of materials performance as a function of irradiation exposure offers a unique opportunity for addressing the materials development and qualification needs for multiple concepts with a coordinated set of experiments designed to determine properties and irradiation behavior under relevant service conditions. Evaluation of candidate materials that can be used for multiple platforms under coordinated irradiation exposure conditions offers both an improved overall database for predicting materials behavior under operating conditions and significant potential cost savings when compared to conducting separate irradiation evaluations for each reactor concept.

Several factors define the allowable dose for structural and cladding materials at a particular operating temperature in a nuclear reactor. Key structural performance issues for most irradiated metallic alloys are time-independent embrittlement at low temperatures and time-dependent cracking, swelling, and deformation at high temperatures.

At low temperatures of 300-600°C applicable for lower temperature reactor vessels and internals, the evolution of non-equilibrium structures and chemistries promote a hardened matrix and lower grain-boundary cohesive strengths, thereby reducing the tensile stress required for cleavage or intergranular fracture in metals. Candidate metallic materials will require fatigue resistance, adequate strength, and resistance to diffusion-driven processes such as radiation-induced segregation and precipitation, void formation and growth, dislocation-loop growth, creep, and high-temperature corrosion and stress-induced corrosion cracking processes. In ceramics, lower operating temperatures result in amorphization or thermal-conductivity degradation. The materials needs studies for the different reactor concepts completed this year identified a range of existing and advanced alloys that are potential candidate materials in this temperature range, include austenitic iron- and nickel-base alloys, F-M alloys (including advanced 9Cr-1Mo and 12Cr-1Mo materials and the low-nickel, reduced-activation alloys developed for the U.S. Fusion Materials Program), and ODS alloys. Most austenitic and nickel-based materials, with the exception of low-swelling austenitic stainless steels, are unlikely to be viable at higher temperatures and doses within this range (>5-10 dpa and 550°C) due to swelling.

At higher operating temperatures between 600º and 800°C, needed for some core-internal applications, materials degradation mechanisms include dimensional instability caused by thermal creep, He embrittlement of grain boundaries, and cavity swelling or anisotropic growth. All these effects become more pronounced with increasing exposure and result in degradation of macroscopic properties that limit safe or useful operation of affected components. Conventional F-M steels cannot be used above 600°C with any significant level of applied stress. The materials needs studies conducted this year identified traditional and modified austenitic stainless steels, ODS F-M steels, precipitate-strengthened iron- or nickel-based superalloys, or refractory alloys of molybdenum, niobium, and tantalum as potential candidates within this temperature range. Nickel-based alloys are not likely to be used in core in this temperature range due to phase instability issues and swelling at high doses (>5-10 dpa).

For still higher temperatures, exceeding 800°C, candidate materials become more limited. Only very high-temperature nickel-based alloys such as alloy 617 or Hastalloy X or XR and high-alloy high-nickel alloys, such as Incoloy 800 or 800HT, remain among the typically available commercial materials, and their approved applications are still limited to maximum temperatures below the needs of the NGNP. Of the potential metal-based systems, only advanced ODS and refractory-metal based systems (e.g. tungsten, niobium, molybdenum, etc.) are believed to have the potential to operate in this temperature range. Insufficient information is known about the radiation performance of these materials at these temperatures. This lack of irradiation information, coupled with the uncertainties associated with the long-term strength and stability of these metallic alloys at very-high temperatures, has lead to the inclusion of ceramics (primarily silicon carbide composites), graphite, and carbon-carbon composites as the primary near-term candidates for these very high-temperature reactor components in radiation service.

4.2 Qualification of Materials for High-Temperature Service

Although the operating conditions vary significantly from one reactor system to the next in the Generation IV Initiative, significant commonality exists with regard to the selection of materials for their high-temperature structural components. This commonality reflects the fact that materials for Class I nuclear components for service above the temperature limits of ASME

Section III will be limited to those materials incorporated into Section III, Subsection NH. Currently, this subsection permits construction with a very few alloys, namely type 304H and type 316H stainless steels, alloy 800H, and 2 1/4Cr-1Mo steel (class 1). The incorporation of Gr91 (modified 9Cr-1Mo-V) steel is in progress. To take full advantage of the potential of the reactor concepts in the Generation IV Initiative, it will be necessary to utilize the advances made in the structural materials technology, select the most promising candidate materials for higher temperature service, and move forward toward acceptance of these materials into the appropriate construction codes.

Even though many of the materials that will be required for construction of high-temperature, out-of-core components will be the same as those used for some in-core applications, the focus of this crosscutting technology development task will be on their unirradiated high-temperature qualification. While short-term tensile and fatigue properties will need to be evaluated for these materials, it is time-dependent creep and creep-fatigue, which are the primary limitations for materials use, that will be most strongly limiting and, hence, principally addressed. The crosscutting technology development associated with high-temperature use of these materials in the presence of neutron irradiation will be addressed in the task on Qualification of Materials for Radiation Service described in Section 4.1.

For the high-temperature materials to be evaluated for out-of-core applications for the Generation IV initiative, the destination of this crosscutting materials research thrust will be their eventual incorporation into ASME Section III, Subsection NH. The materials for such high-temperature service may be separated into several categories by approximate upper-use temperatures. While there is some overlap, and more advanced materials within a class will somewhat extend the temperature limits of current materials, these classes roughly correspond to: (a) ferritic steels including bainitic and martensitic steels up to 12% chromium for use up to about 650-700°C, (b) austenitic stainless steels for use up to about 800-850°C, (c) high alloys, in which iron content is greater than any other element, and nickel-base alloys for use up to about 900-950°C, and (d) special materials such as ODS alloys for possible use up to about 1000-1050°C.

The two primary technical thrusts within this crosscutting activity for the next several years will be to: (1) evaluate the current commercial or near-commercial materials for adequacy of data and properties to incorporate into Subsection NH of the ASME Section III for high-temperature service and begin the codification of those appropriate materials, including required generation of incremental additions to existing data, and (2) perform evaluation and screening of promising advanced materials for higher temperature service, resulting in the selection of candidate materials for further development and eventual inclusion into the Section III Subsection NH. These evaluation and development activities will include all appropriate product forms and section thicknesses needed for required reactor components, including weldments and their constituents (weldmetal, HAZ, and basemetal). Given the accelerated materials qualification activities mandated by the early deployment of the NGNP, it will be necessary to rely almost completely on current commercial materials for the demonstration plant. However, to help optimize performance and minimize costs of follow-on NGNPs, as well as the remaining Gen IV reactors with later anticipated deployment dates, evaluation of advanced materials will be included in the crosscutting research on materials for high-temperature service from the onset of the program.

A particularly important activity that is included within this task is the establishment, population and maintenance of the overall Gen IV materials database. In FY04, an assessment was made of the needs of the Gen IV stakeholders for a database, including SIMs, reactor vendors, regulators, codes and standards bodies, and DOE staff. The need for an integrated database that could be used for as a basis for research, design, evaluation, and regulation of Gen IV

reactors was strongly endorsed by all stakeholders. Plans were established regarding content, format, and quality requirements for the database. Starting in FY05, the plan will be implemented and the development and maintenance of the database will proceed as a major activity, initially incorporating historical data and then providing a repository for new data generated within the Gen IV Program.

4.3 Microstructural Analysis and Model Development

The most basic issue that drives the need for a modeling activity is that it is not possible for the experimental programs to cover the breadth of materials and irradiation conditions required for even one of the proposed Gen IV reactor designs. It is a trivial observation that reactor components with lifetimes of up to ~60 years cannot reach end-of-life fluence under prototypic exposure conditions in Gen IV experiments. In some cases, irradiation at higher neutron fluxes in materials test reactors can provide data at the desired fluence, but the effect of accelerated irradiation may alter the material response. More significantly, a range of structural materials will be exposed in environments characterized by temporal and spatial gradients in neutron flux (and hence fluence), temperature, mechanical loading, and chemically-active (corrosive) coolants. As a result, material selection will have to be based on an incomplete experimental database with considerable judgment required to carry out the necessary interpolation and extrapolation.

One of the prominent roles for modeling and microstructural analysis is to provide the basis for making these judgments. The development and application of physically-based models can help interpret the results of experiments that can be carried out only at discrete points within the complete domain of expected exposure conditions, and also provide information for conditions that may be too costly or impossible to reach experimentally. At the same time, the microstructural models can only be reliably developed if an adequate experimental database exists. Uncertainties in material parameters, and the fact that the models are necessarily approximate with respect to the complete set of physical mechanisms that can come into play, mean that experimental data are required for validation and calibration. The required experimental information includes data from engineering experiments (e.g. on dimensional and mechanical property changes, and microstructural measurements from irradiation of candidate materials), and fundamental experiments to verify our understanding of specific mechanisms. Data from these latter experiments, in which specific variables are carefully controlled, are crucial for making confident, model-based extrapolations.

A major aspect of this task is to develop and maintain an integrated link between the modeling and experimental components of the Gen IV materials program. Close interactions with the crosscutting tasks on Materials for Radiation Service and Materials for High-Temperature Service, and related activities for specific reactor concepts are particularly important during the time that the experimental database to support material selection is being generated. These interactions will promote the development of the scientific basis needed to support material choices in the Gen IV program. Although the Gen IV schedule will not likely permit the development of completely new materials, a science-based, integrated program of modeling and key experiments can provide the opportunity to “push the envelope” on materials that are currently in a developmental state by providing an understanding of material behavior in the various reactor environments. Such a program can identify limiting properties and suggest approaches for improving the performance of promising materials, e.g. by changes in alloy chemistry or thermo-mechanical processing. Additionally, the program can provide a much improved basis for extrapolating the performance of selected materials to greater neutron exposures and longer times than can be obtained experimentally.

In summary, the overall strategy of this task is to develop physically-based models of microstructural evolution and correlations describing the relationship between microstructure

and mechanical properties in order to address the materials challenges associated with the Gen IV program. The goal is to develop the ability to make accurate predictions of radiation-induced dimensional changes and mechanical property changes for Gen IV reactor materials and to describe how these properties evolve in service in the target irradiation environments. Although other tasks for crosscutting and reactor-specific materials are primarily responsible for generating experimental data, this task will help support fundamental experiments and microstructural characterization needed for model development.

4.3.1 Fundamental Materials Issues in the Fission Reactor Environment

The response of materials to the in-service environment is determined by a large number of inter-related variables. These include: factors that determine the radiation damage rate (neutron flux level and the neutron energy spectrum), the total damage dose (neutron fluence), temperature, stress level and stress state, and the chemical environment. Moreover, predicting material response is complicated by well-known synergistic interactions among this set of variables; the most common example being the interaction between dose rate and irradiation temperature. The influence of reactor duty cycle and operating history further confound the issue of predicting material response.

As a reasonable and necessary expedient, this task will initially work with relatively simple models for individual processes and properties. This work will build on the foundation of previous modeling work funded by the LMFBR, OFES, and OBES programs. Ongoing development will lead to more robust and comprehensive models as the relevant experience and knowledge base grows. As mentioned above, the integrated modeling program will maintain close links with researchers involved in the experimental and high temperature design tasks during this process. For example, the success of the recently developed “master curve” method of describing fracture behavior in ferritic steels (see ASTM Standard E1921) indicates that it may be possible to obtain a more fundamental understanding of the micromechanical mechanisms that control the ductile-to-brittle transition in these materials. Improved modeling of atomic scale processes and dislocation interactions that are responsible for this embrittlement phenomena are expected to provide this understanding. A second example of the modeling-experimental interface is provided by the development of mechanical performance maps (similar to Ashby maps) that can be used to systematically condense and describe the results obtained from modeling studies and data analysis.

The underlying physical basis of the models that will be developed is microstructural. The models will include the mechanisms that lead to the production, transport and fate of defects and key alloy constituents as a function of the material and irradiation-service variables. The microstructural evolution models will track dimensional changes such as void swelling and irradiation creep and the microstructure will be linked to basic structure-sensitive properties, such as the yield stress. These basic mechanical properties must in turn be linked to other engineering properties, e.g. flow properties and fracture toughness. Microstructural information and mechanical property data developed within the experimental component of the Gen IV program, as well as relevant data generated by other programs such as OFES and OBES, the NRC, and the wider materials science community, will provide the basic information needed for model development and verification. This implies developing and applying:

- individual mechanistic models describing key phenomena
- integrated multiscale models of microstructural evolution and material properties
- an appropriate mix of dimensional measurements and mechanical property testing
- thorough application of modern microstructural characterization tools
- fundamental experiments to investigate specific mechanisms and provide necessary physical parameters for the models

- verification of model predictions using the results of integral database experiments
- physically-based, engineering correlation models from evolving databases

It is clear that resolving the materials challenges posed by the multiple advanced reactor designs will require resources beyond those the Gen IV program is expected to provide. Therefore, a critical part of this effort will be to establish and maintain interactions with researchers outside the program whose investigations will provide additional information on the microstructures, properties, and performance of materials relevant to the various Gen IV reactor applications. This includes research conducted by other nuclear energy programs as well as other research efforts in the larger materials science community.

One successful example of such a collaboration is the International Group on Radiation Damage Mechanisms (IGRDM) which has substantially advanced our understanding of embrittlement mechanisms in light water reactor pressure vessels. The efficient use of resources also requires that the research groups funded by Gen IV collaborate effectively. Thus, efforts will be made to improve the framework for collaboration between those institutions and individuals that are funded by the program. This will no doubt involve cooperation and the development of partnerships between the national laboratories as well as between the laboratory staff and university researchers. Several components of the modeling task are good candidates for university-funded research projects.

4.4 Development of Improved High-Temperature Design Methodology

Time-dependent failure modes and time- and rate-dependent deformation response to time-varying thermal and mechanical loadings characterize the design of Generation IV metallic components operating at high-temperatures. The threshold defining high-temperature operation is 371°C (700°F) for the ferritic steels currently permitted for construction of Class 1 nuclear components by the ASME Boiler and Pressure Vessel Code, Section III, Subsection NH, and 427°C (800°F) for the permitted austenitic alloys. The primary role of the High-Temperature Structural Design Technology task, which is an integral and inseparable part of the overall Generation IV materials program, is three-fold. First it will provide the data and models required by ASME Code groups to formulate time-dependent failure criteria that will assure adequate life for components fabricated from the selected Generation IV materials.[8] Second, it will provide the experimentally-based constitutive models that are the foundation of the inelastic design analyses specifically required by Subsection NH of Section III of the ASME Boiler and Pressure Vessel Code, which governs design of elevated-temperature Class 1 nuclear components [3]. Third, it will provide appropriate simplified design procedures required for the conceptual and preliminary phases of design and will be useful for many less-critical regions in final design. This task is thus a key part of the codification and utilization of the selected Generation IV structural materials.

A secondary role of the task deals with regulatory acceptance. Safety assessments, required by NRC, will depend on time-dependent flaw growth and the resulting leak rates from postulated pressure-boundary breaks. This requires a flaw assessment procedure capable of reliably predicting crack-induced failures as well as the size and growth of the resulting opening in the pressure boundary. Identification of an overall proven procedure is a part of this task.

[8] A clear distinction should be made between the development of criteria (e.g., the damage accumulation rule and multiaxial strength criterion needed to guard against creep rupture) and the design data needed to quantify the criteria (e.g., uniaxial creep-rupture data). The former are largely the purview of the High-Temperature Structural Design Technology task; the latter are the responsibility of the design data generation tasks.

The task is focused primarily on four Generation IV reactor concepts. These concepts, their approximate coolant inlet and outlet temperatures, and representative candidate component materials are shown in Table 44. A common feature of all four concepts is that the coolant outlet temperature is above the threshold for time-dependent deformation and failure behavior for the alloys currently covered by Subsection NH. Actually, component materials should have adequate long-term performance at temperatures about 50°C higher than the normal operating temperatures given in Table 44. Furthermore, they must withstand abnormal excursions to even higher temperatures without adversely affecting subsequent component design life.[9] The target design life of Generation IV components is generally 60 years (526,000 h), which significantly exceeds life times currently allowed by Subsection NH.

The candidate structural materials listed in Table 13 fall largely into two classes: medium-high-temperature alloys, characterized by the Cr – Mo steels and AISI 304 and 316 stainless steels, and very-high-temperature alloys, characterized by nickel-base alloys. The strategy for the crosscutting development effort described herein is to focus initial efforts on a representative material from each class – modified 9 Cr – 1 Mo steel at medium high temperatures and nickel-base Alloy 617 at very high temperatures. As other key structural materials are identified for the various reactor concepts, they will be factored into the effort, especially for NGNP components and in those cases where an identified material is common to more than one reactor concept. The pace of the main effort will be dictated by the NGNP schedule and funding, since NGNP is accelerated relative to the schedules for the other three concepts.

The overall challenges and requirements for designing high-temperature Generation IV components, especially when operating temperatures are at the upper end of the usable range for the chosen materials, as will likely be the case for Generation IV components, are explained, as background, in the Section 3.1.2.6 on HTDM for NGNP. The current scope and coverage of Subsection NH of the ASME Code and its associated Code cases are also outlined in Section 3.1.2.6. Identified shortcomings and limitations, as they apply to Generation IV plant components, are described. Against this backdrop, and the projected NGNP schedule, the requirements for codification and design with the selected Generation IV high-temperature metallic materials and the overall scope and schedule for the required High-Temperature Structural Design Technology task are presented in Section 3.1.2.6. The task is divided into six subtasks:

- inelastic design analysis methods,
- failure models for design criteria,
- simplified methods and criteria,
- confirmatory structural tests and analyses,
- safety / reliability assessments, and
- resolution of identified shortcomings, issues, and regulatory concerns.

[9] A clear distinction should be made between the development of criteria (e.g., the damage accumulation rule and multiaxial strength criterion needed to guard against creep rupture) and the design data needed to quantify the criteria (e.g., uniaxial creep-rupture data). The former are largely the purview of the High-Temperature Structural Design Technology task; the latter are the responsibility of the design data generation tasks.

Table 44. Generation IV reactor concepts, coolant temperatures, and representative candidate structural materials.

Reactor concept	Coolant temperature, T_{in} / T_{out} (°C)	Representative components and candidate structural materials
Next Generation Nuclear Plant (NGNP, very-high-temperature gas-cooled reactor)	650 / 1000	9 Cr (9 Cr - 1 Mo) or 12 Cr steel for pressure vessel; nickel-base alloys for very-high-temperature hot-gas components, including IHX
Gas-Cooled Fast Reactor (GFR)	490 / 850	9 Cr to 12 Cr martensitic steel or 2 1/4 Cr - 1 Mo steel for pressure vessel (carbon steel if cooled); nickel-base alloys, AISI 316 stainless steel, or 9 Cr ODS for very-high-temperature hot-gas components
Supercritical Water Reactor (SCWR)	280 / 500	SA 508 Grade 3 steel, or higher-strength alternative 508 Grade 4N or developmental 3 Cr - 3 WV steel, for vessel with insulated outlet nozzle; existing Subsect. NH materials (9 Cr - 1 Mo steel or three austenitic alloys), or improvement thereof, for uninsulated vessel and for high-temperature steam lines
Lead-Cooled Fast Reactor (LFR)	— / 550 (near-term, lead - bismuth cooled)	AISI 304 or 316 stainless steel, or modification thereof, for core vessel; 2 1/4 Cr - 1 Mo or 9 Cr - 1 Mo for heat exchangers; advanced stainless steels or ferritic - martensitic steel for upper core internals
	— / 750-800 (long-term, pure lead cooled)	Higher temperature alloys for vessel and heat exchangers; possibly refractories or ceramics for core components

The activities and funding within this crosscutting task and its associated milestones included in section 4.7 and 5.4, respectively, are expected to address the high-temperature design methodology needs for materials for the GFR, LFR, and SCWR systems. Specialized schedule-driven reactor-specific needs the development of high-temperature design methodology for NGNP system materials are addressed in section 3.1.2.6 on NGNP materials. Since the HTDM activities for the NGNP will provide the lead this overall topical area, the crosscutting HTDM activities will supplement the NGNP tasks as needed for the remaining systems.

4.5 System-Specific Materials

The primary areas of system-specific materials research include structural materials compatibility with coolants and heat-transfer media and materials that will be used with a particular system, such as graphite for the NGNP or structural ceramics for the use in GFR core components. Additionally, high-temperature- and radiation-service materials tasks that must be addressed on such an accelerated schedule that it outpaces crosscutting research have been identified for the NGNP. The expert assistance required to formulate and coordinate such research will be provided from within the crosscutting tasks on the same topical areas

In additional to providing coordination for the reactor-specific needs of the Gen IV Program, it is important to consider the various approaches for their energy conversions system that include both electrical generation and use of process heat for hydrogen production. While many of the

materials issues for electrical generation are similar to those in the fossil fuel industry, the same cannot be said for hydrogen production. Multiple approaches, described in detail in Section 2.5 of this document on NHI systems, include the use of thermo-chemical separation and thermally assisted electrolysis. Both of these approaches will have significant materials challenges including high-temperature structural stability, stability and effectiveness of special functional materials for catalysis and separation technology, thermal barrier materials, and materials compatibility with a variety of heat-transfer media and process-related chemicals.

Also of particular concern are the very high-temperature heat exchangers envisioned both on the reactor side and the hydrogen production side of the process-heat transfer loops, as well as the lower temperature heat exchangers used within any chemical separation system. The combination of high-temperature operations and simultaneous exposure to multiple process and heat transfer fluids will present significant challenges to maintain the integrity of the thin sections inherent in heat exchangers.

While some of the specialized requirements for materials will be addressed as part of the related crosscutting task, the remaining specialized materials requirements for the particular reactor and energy conversion systems will need to be addressed separately. Therefore, activities within this subtask will focus on working with the reactor SIMs, the energy conversion crosscutting NTD, and the PM for the NHI program to develop and implement an individualized, yet integrated, materials program that addresses their needs for high-temperature materials, materials compatibility, corrosion, and functional materials in a coordinated, prioritized manner. It is important to note that the detailed milestones for the system-system materials concerns will be specified for and associated required funding allocated directly by the affected SIM, NTD or PM.

The system-specific tasks that have been identified to date are described in detail in Sections 3.1 through 3.5.

4.6 National Materials Technology Program Integration

To help ensure that the materials R&D activities conducted within the overall Generation IV Reactor Initiative form an integrated, efficient program, an additional task is included to coordinate, prioritize, and implement materials cross-cutting research with that needed for each specific reactor concept and the energy-conversion system. Principal activities within this task will be to work with the SIMs, Pms, and other NTDs to:

- Develop a detailed understanding of the conditions that all major components and subsystems in each reactor concept and energy-conversion system must withstand (e.g. temperature, irradiation dose, corrosive media, etc., and their combinations);
- Collect and evaluate existing related data from domestic and foreign sources to determine deficiencies in materials data or capabilities;
- Provide cross-platform guidance to ensure appropriate materials R&D is performed in support of each reactor concept, with minimum overlap and no technical voids;
- Ensure that the cross-cutting materials research provides needed and useful information that can be applied to support all reactor concepts; and
- Help ensure that an integrated materials research is developed, prioritized, and implemented to address the materials needs of the overall Generation IV Reactor Initiative.

The major products of this task will be to provide regularly updated reports assessing potential materials for use in all Generation IV reactor concepts and providing recommendations for reactor-specific materials screening and evaluations to identify viable candidate materials.

The high-level objectives of the Integrated Gen IV National Materials Technology Program for the next ten years are to:

- Complete updated assessments of cross-cutting and reactor-specific materials for use in all Generation IV reactor concepts to identify viable candidate materials;
- Complete the development of a comprehensive irradiation-effects materials database for materials needed for radiation service in Generation IV reactors;
- Complete development of a comprehensive high-temperature materials properties database to support the design, use, and codification of materials needed for Generation IV reactors;
- Complete adequate qualification of the materials to be used in the NGNP reactor to enable the design and ordering of all major components and subsystems;
- Complete development of an improved high-temperature design methodology that will support design, use, and codification of materials needed for Generation IV reactors;
- Complete development of an comprehensive model for predicting long-term properties of materials needed for Generation IV reactors as a function of thermal and irradiation exposure; and
- Interface with Generation IV International Forum and relevant domestic and foreign materials research programs to optimize the effectiveness of materials R&D plan

The anticipated deployment of the NGNP by the end of the next decade will require a strong acceleration of materials qualification needed to enable final design and ordering of long-lead components by about 2012. As a result, a major focus of materials research during the next ten years will be on the qualification of commercial and near-commercial materials and the related high-temperature design methodology needed to specify and order those components. Parallel studies on materials for other reactor concepts will both take advantage of the accelerated work for the NGNP and examine additional materials under other conditions where the NGNP materials studies are inadequate or inappropriate for their conditions. To help level required resources to the extent possible, the additional studies on materials for other reactor concepts will generally increase in scope as portions of the NGNP-related materials studies are completed.

4.7 Experimental R&D Plans for Crosscutting Materials

A high-level summary of R&D plans and schedules for the materials crosscutting tasks is provided below. The schedule for major deliverables for all crosscutting activities predicated on adequate funding. The required funding for these activities is identified in Section 5.4 of this report. Funding for reactor-specific and energy-conversion-system materials needs other than for planning and coordination will be provided by the other reactor concepts and energy conversion activities.

Milestones

FY 2005

- Complete low-dose scoping irradiations of commercial and near-commercial materials

- Complete detailed survey of metallic materials for irradiated service in Gen IV reactor internals and RPVs including requirements for irradiation temperatures, temperature overlap and irradiation conditions for fast spectrum reactors GFR/LFR, mixed spectrum reactor SCWR and thermal spectrum reactor NGNP
- Issue description and usage guidelines for Gen IV database
- Complete initial population of materials database on from historical, available data on commercial and near-commercial materials
- Issue letter report on scoping evaluation of Friction Stir Welding of advanced alloys
- Issue report on microstructural model assessment and experimental needs for Gen IV reactors
- Issue report on assessment and modifications of radiation and high-temperature models for ODS materials
- Perform variable strain range and hold-time fatigue testing and develop isochronous tensile curves 617 and incorporate data into Gen IV database
- Develop improved constitutive equations for 617 and issue report on high-temperature methods development advances for 617
- Prepare updated, status report on assessment and selection of crosscutting candidate materials for high-temperature and radiation service in Generation IV reactor systems.

FY 2006

- Complete PIE for low-dose scoping irradiations of commercial and near-commercial materials.
- Initiate low-dose scoping irradiations of ceramics, ceramic composites, and advanced metallic materials
- Structure an integrated experimental and modeling approach to investigate radiation effects issues that crosscut the four reactor concepts, with emphasis on critical areas
- Perform detailed analysis of available reactor facilities that will accommodate irradiation capsules at conditions needed for high flux-high temperature irradiations for SCWR, GFR and LFR, and low flux-high temperature irradiations for NGNP
- Initiate joining and combined-effects screening studies on commercial and near-commercial alloys.
- Scubb and evaluate initial population of historical data in materials database
- Complete population of materials database with historical available data, and initiated additions of advanced materials data and new data developed in Gen IV Program
- Initiate extension of materials database for data developed by GIF partners
- Prepare documents of 316FR and alloy 617 for ASME codification.
- Provide interim constitutive equations for 9 Cr, Grade 92 steel and Alloy 617 to aid in Code development and design studies.
- Prepare interim report on results of model-based the nucleation phase of the significant extended defects produced under irradiation.

- Prepare updated, status report on assessment and selection of crosscutting candidate materials for high-temperature and radiation service in Generation IV reactor systems.

FY 2007

- Complete low-dose scoping irradiations and PIE of advanced materials
- Complete selection of primary RPV candidate materials based on screening irradiation experiments.
- Based on analysis of neutronic, volumetric and instrumentation characteristics select host reactor facilities for irradiations and initiate designs of irradiation capsules for GFR, LFR, and SCWR
- Continue studies of time-dependent mechanical properties combined-effects on commercial and near-commercial alloys
- Continue detailed studies of high-temperature, time-dependent properties for advanced candidate materials for high-temperature service and required materials modifications
- Continue joining studies on commercial and near-commercial alloys and initiate joining studies on advanced high-temperature materials
- Complete development of evaluated description of historical data in materials database
- Continue population of materials database on from advanced materials and new data developed in the Gen IV Program by U.S. and foreign partners
- Initiate constitutive equation development activities for other key common Generation IV component materials.
- Propose validated creep-fatigue failure criteria for 9 Cr, Grade 92 steel and Alloy 617, or a variant thereof.
- Complete Alloy 617 confirmatory structural tests and initiate testing of models for other key Generation IV structural materials
- Prepare interim report describing overall microstructural evolution under low and high temperature irradiation, include results from preliminary modeling studies and microstructural characterization.
- Prepare interim report on mechanisms responsible for the development of radiation-enhanced, -induced, and -modified microstructural changes.
- Prepare report on overall assessment and interim selection of assessment and selection of crosscutting candidate materials for high-temperature and radiation service in Generation IV reactor systems.

FY 2008

- Prepare report on scoping studies of low-dose irradiations of commercial, near-commercial, and advanced materials for radiation service
- Complete preliminary assessment of candidate materials for radiation service for high temperature reactors and provide input to remaining reactor concepts regarding establishing detailed plans to meet their needs
- Complete designs of irradiation capsules for GFR, LFR, and SCWR
- Initiate high-dose scoping irradiations of advanced materials for reactor internals

- Complete preliminary assessment of candidate materials for radiation service for high temperature reactors and provide input to remaining reactor concepts regarding establishing detailed plans to meet their needs
- Complete development of evaluated description of initial advanced materials database
- Continue population of materials database on from advanced materials and new data developed in the Gen IV Program by U.S. and foreign partners
- Prepare interim report on initial studies of time-dependent mechanical properties, combined-effects, and joining technology for advanced alloys and provide recommendations for further studies.
- Prepare interim report on kinetics and thermodynamics of formation and stability of the very fine oxide clusters in ODS alloys, and make recommendations on use of ODS alloys.
- Recommend interim unified constitutive equations for selected Generation IV materials.
- Initiate development of a very-high-temperature flaw assessment procedure
- Prepare interim report on microstructural basis for mechanisms that contribute to high-temperature, time-dependent damage.
- Prepare updated, status report on qualification of crosscutting candidate materials for high-temperature and radiation service in Generation IV reactor systems.

FY 2009

- Complete low-dose irradiation experiments and PIE of advanced materials for reactor internals
- Complete irradiation experiments of control structural elements for high temperature reactors.
- In conjunction with microstructure and modeling task, design special materials experiments to examine effects of high dose rate-high temperature irradiations for SCWR, GFR and LFR conditions
- Initiate qualification testing of advanced materials for high-temperature service for all advanced reactor concepts
- Complete initial qualification studies of advanced materials for high-temperature service and provide recommendations for further studies for all advanced reactor concepts
- Provide interim design basis for existing Gen IV materials in database
- Continue population of materials database on from advanced materials and new data developed in the Gen IV Program by U.S. and foreign partners
- Recommend revised simplified methods for satisfying strain limits and creep-fatigue criteria.
- Prepare interim report on atomistic modeling in support of advanced micromechanical models for predicting mechanical properties of structural materials.
- Prepare report on results of comprehensive modeling of radiation-induced microstructural evolution in the primary Gen-IV candidate structural materials, identify areas for further model development.

- Recommend final revised simplified methods for satisfying strain limits and creep-fatigue criteria in high-temperature structural design.
- Prepare updated, status report on qualification of crosscutting candidate materials for high-temperature and radiation service in Generation IV reactor systems.

FY 2010

- Complete initial irradiation experiments of advanced materials for reactor internals
- Complete PIE of control structural elements for high temperature reactors
- In collaboration with microstructure and modeling task, perform advanced microstructural analysis and property measurements to examine effects of low dose rate-high temperature irradiations
- Continue qualification testing of advanced materials (such as ODS etc.) for high-temperature service for all advanced reactor concepts
- Continue population of materials database on from advanced materials and new data developed in the Gen IV Program by U.S. and foreign partners
- Prepare detailed interim report on integrated models for assessing radiation-induced and time-dependent, high-temperature changes in Gen-IV candidate structural materials.
- Provide improved models of mechanisms for high-temperature, time-dependent plasticity as input to the formulation of design criteria for elevated temperature VHTR materials service.
- Finalize constitutive equations for all key Gen IV structural metals

FY 2011

- Complete high dose scoping irradiations of advanced materials for reactor internals
- Complete assessment of candidate advanced materials for high dose internals radiation service
- Complete assessment and provide report on irradiations of control structural elements
- Continue qualification testing of advanced materials (such as alloy 214) for high-temperature service for all advanced reactor concepts
- Provide revised design basis for Gen IV materials in database
- Continue population of materials database on from advanced materials and new data developed in the Gen IV Program by U.S. and foreign partners
- Prepare final report on model-based analysis of formation and stability of radiation-induced or enhanced phase stability in irradiated alloys, including oxide clusters in ODS alloys.
- Prepare final report on results of microstructural analysis of irradiated and thermally-aged Gen-IV candidate structural materials examined under this task.
- Validate final simplified design rules for ratcheting and creep-fatigue damage for Gen IV materials.
- Initiate development of procedures to guard against thermal-striping failures in upper

internal structures of LFR

FY 2012

- Initiate high dose irradiations of candidate advanced materials for internals radiation service
- Prepare reports on scoping irradiations of advanced materials for reactor internals
- In collaboration with microstructure and modeling task, perform advanced microstructural analysis to examine effects of high dose rate-high temperature irradiations for SCWR, GFR and LFR conditions
- Continue population of materials database on from advanced materials and new data developed in the Gen IV Program by U.S. and foreign partners
- Continue assessment mechanical properties of special and advanced materials
- Prepare final report on micromechanical models, including their atomistic basis, used to predict relationship between microstructure and mechanical properties in structural materials planned for use in Gen-IV reactor program.
- Prepare high-temperature materials supporting documents for licensing

FY 2013

- Continue high dose irradiations of candidate advanced materials for internals radiation service and provide recommendations for further studies for all advanced reactor concepts
- Prepare final report of irradiation effect on primary candidate advanced materials for internals radiation service
- Provide final design basis for Gen IV materials in database
- Continue population of materials database on from advanced materials and new data developed in the Gen IV Program by U.S. and foreign partners
- Provide recommendations for further studies for all advanced reactor concepts
- Assess mechanical properties of cladding materials
- Continue to assess mechanical properties of reactor-specific materials
- Investigate time-dependent crack growth properties of crosscutting materials
- Prepare final report on integrated models for assessing radiation-induced and time-dependent, high-temperature changes in Gen-IV candidate structural materials and provide recommendations for any further studies required to refine and validate the models in support of Gen-IV reactor operations.
- Recommend thermal-striping assessment guidelines
- Resolve identified shortcomings, issues, and regulatory concerns in high-temperature structural design methodology.

References

[1] J. M. Corum, September 2003, *Crosscutting R&D Plan for Development of High-Temperature Structural Design Technology for Generation IV Reactor Systems*, ORNL/TM-2003/243 (Draft)

[2] R. E. Stoller and L. K. Mansur, September 2003, *Modeling and Microstructural Analysis: Needs and Requirements for Generation IV Fission Reactors*, ORNL/TM-2003/242 (Draft)

[3] *2001 ASME Boiler and Pressure Vessel Code, Sect. III, Subsect. NH, Rules for Construction of Nuclear Facility Components, Class I Components in Elevated Temperature Service,* Am. Soc. of Mechanical Engineers.

5.0 GEN IV MATERIALS FUNDING REQUIREMENTS

Estimated funding requirements for all aspects of the Gen IV Materials Program, including reactor-specific and crosscutting activities have been or are being generated. Where those estimates are mature enough to have adequate fidelity, they are included here. The remaining funding estimates will be added and the existing ones will be updated in future versions of this report.

It is understood that the required funding levels detailed in the following tables may not be available during the time periods indicated. Schedules and deliverables will be adjusted to the match the available funding profiles. Nonetheless, the funding requirements included below do provide valuable information for planning purposes regarding the magnitude and extent of the research described in the body of this report.

It should also be noted that the estimates of required funding include funding for all tasks identified within the scope of this document for the time periods indicated. There is the strong likelihood that the funding required from the Gen IV Program will be reduced from these estimates by cost sharing with international partners and domestic programs, as well as by utilizing lower research cost organizations, such as universities, where the scope of individual tasks is appropriate.

5.1 Funding Requirements* for the NGNP Materials Program

Task/Req'd Funding (M$)	FY04	FY05	FY06	FY07	FY08	FY09	FY10	FY11	FY12	FY13	FY14	FY15	Total
Graphite		1.6	12.6	7.2	5.5	4.8	4.7						36.4
Hi Temp Design Methods	0.3	1.3	5.3	4.0	8.0	5.4	4.2	4.1	2.2	2.2	2.2	2.2	41.4
Code & Standards		0.5	0.5	0.5	0.5	0.5	0.5	0.5	0.5				4.0
Environ Testing & Aging	0.3	0.7	2.8	2.8	2.8	0.5	0.5	0.5	0.5				11.1
RPV Irradiation Facility		0.5	0.5	0.5	0.5	0.5							2.5
Structural Composites		1.0	3.0	5.0	7.1	4.1	1.9						22.1
Database & Handbook			0.8	0.8	0.8	0.8	0.8	0.8					5.0
Turbine & Generator			1.3	3.1	1.6								6.0
RPV Transport & Fab		0.2	6.5	10.5	10.5	6.5	5.3						39.5
RPV Emissivity			0.2	0.2									0.4
Metallic Core Internals			5.2	5.2									10.3
Hot Duct and Insulation					0.9	3.3	2.7	2.8	0.2				9.9
IHX and Piping						2.0	2.9	1.5	0.8	0.6	0.4		8.2
IHX Pressure Vessel						0.3	0.4	0.4	0.3	0.3	0.3		2.0
Valves, Bearings, Seals					1.0	1.0	0.5						2.5
Administration	0.4	0.7	1.4	1.7	1.7	1.7	1.7	1.0	0.7	0.5	0.1	0.1	11.3
Total	0.7	6.4	40.1	41.5	40.9	31.1	25.7	11.2	4.9	3.3	2.7	2.3	212.5

*Does not include neutron costs for DOE reactors

5.2 Funding Requirements for the SCWR Materials Program*

Task/Req'd Funding (K$)	FY05	FY06	FY07	FY08	FY09	FY10	TOTAL
Reactor Pressure Vessel Materials	0	3000	3650	3300	3200	2000	15150
Reactor Internals Materials	420	13500	12580	20000	25000	21000	92500
Pump, Piping, and Valve Materials	0	6000	8700	6400	5800	4200	31100
Power Conversion System Materials	0	4400	5000	4600	300	300	14600
TOTAL	420	26900	29930	34300	34300	27500	153350

*Does not include neutron costs for DOE reactors.

5.3 Funding Requirements for the GFR Materials Program*

Task/Req'd Funding	FY05	FY06	FY07	FY08	FY09	FY10	TOTAL
Ceramic Internals	325	5,750	7,175	7,400	7,500	6,500	34,650
Metallic Internals	0	3,800	6,600	6,800	5,900	4,900	28,000
Reactor Pressure Vessel Materials	0	1,400	1,300	900	500	500	4,600
High-Temperature Metallic Components	0	460	700	600	550	350	2,660
Power Conversion System	0	550	850	750	750	300	3,200
Materials Compatibility	0	1,200	3,400	6,200	5,000	2,900	18,700
High-Temperature Design Methodology	0	250	600	1,250	1,350	1,150	4,600
TOTAL	325	13,410	20,625	23,900	21,550	16,600	96,410

*Does not include neutron costs for DOE reactors.

5.4 Funding Requirements for the Materials Crosscutting Program

Task	FY05	FY06	FY07	FY08	FY09	FY10	FY11	FY12	FY13	TOTAL
Materials for Radiation Service	300	2,350	2,350	4,900	6,000	5,000	5,000	4,000	4,000	33,900
Materials for High-Temp Service	260	1,900	1,900	3,950	4,950	3,950	2,500	2,500	2,500	24,410
Microstructural Modeling	110	1,100	1,500	1,900	2,100	2,100	2,000	1,800	1,500	14,110
High-Temp Design Methodology (a)	300	1,500	1,500	1,500	1,500	1,500	1,500	1,500	1,500	12,300
System-Specific Materials (b)	130	150	200	200	200	200	200	200	200	1,680
National Materials Program Management	400	600	600	730	730	730	730	730	730	5,980
TOTAL	1,500	7,600	8,050	13,180	15,480	13,480	11,930	10,730	10,430	92,380

[a] A significant fraction of the funding for this overall task will be provided by the NGNP Materials Program

[b] Primary funding for this task to be provided by individual reactor concepts and NHI, only limited coordination funding shown